2005 Vulcan 2000

PARTS DIAGRAM

Rear Brake

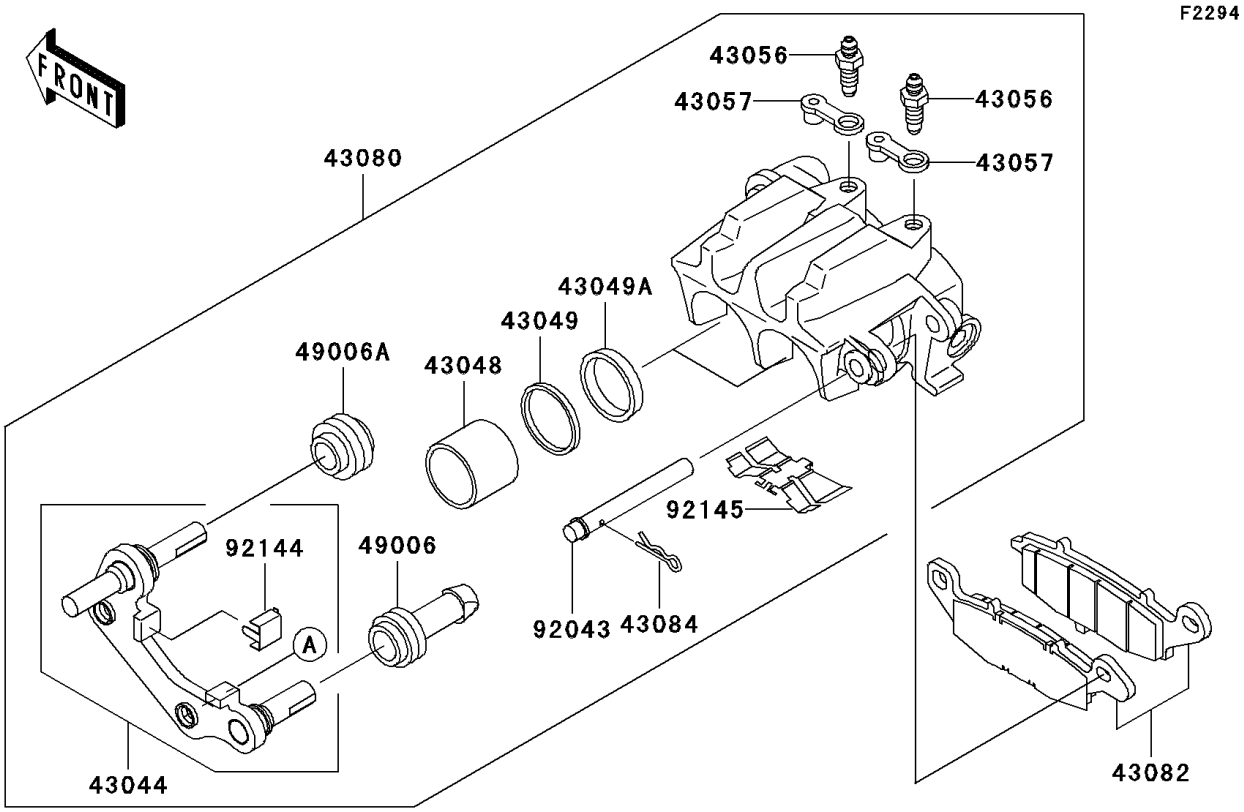

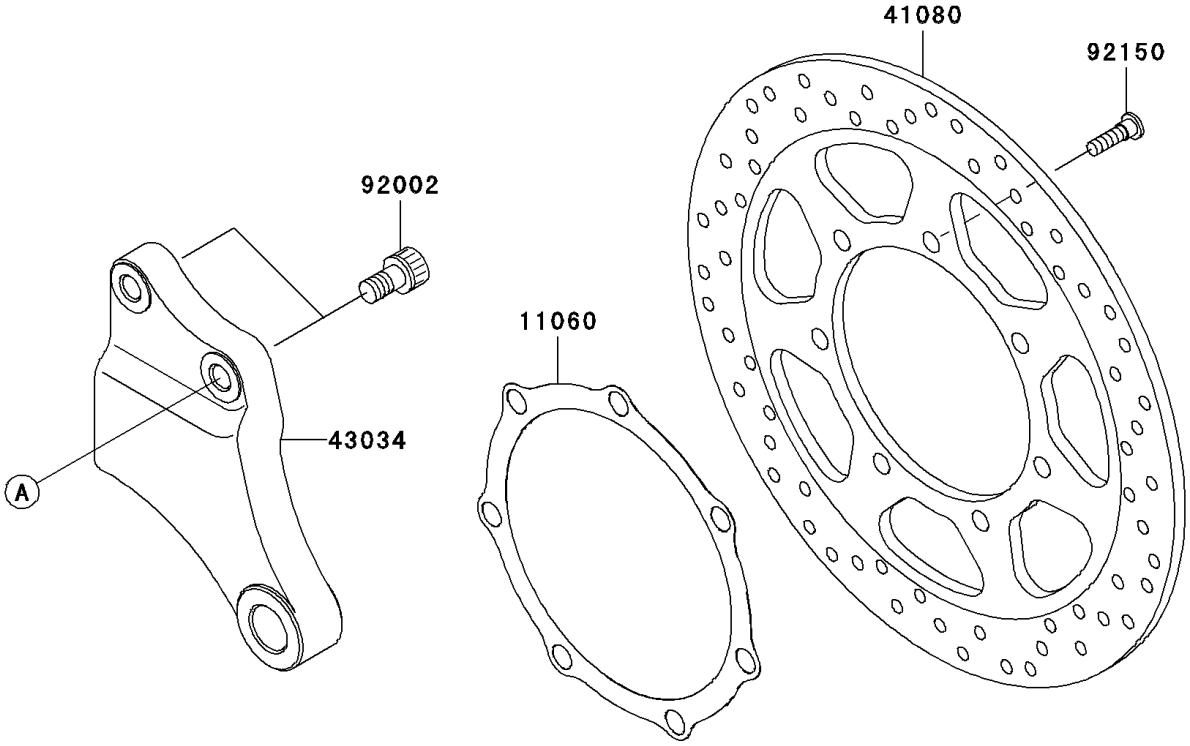

© 2026 Kawasaki Motors Corp., U.S.A.

2005 Vulcan 2000

PARTS LIST

Rear Brake

ITEM NAME	PART NUMBER	QUANTITY
GASKET,DISC (Ref # 11060)	11060-1865	1
DISC,RR,SILVER (Ref # 41080)	41080-0007-CM	1
HOLDER-BRAKE,REAR CALIPER (Ref # 43034)	43034-0001	1
HOLDER-COMP-CALIPER,RR (Ref # 43044)	43044-1134	1
PISTON-CALIPER (Ref # 43048)	43048-1094	2
PACKING (Ref # 43049)	43049-1068	2
PACKING,PISTON SEAL (Ref # 43049A)	43049-1092	2
BREATHER-BRAKE (Ref # 43056)	43056-1054	2
CAP-BREATHER (Ref # 43057)	43057-003	2
CALIPER-SUB-ASSY,RR,SILVER (Ref # 43080)	43080-5098-GN	1
PAD-ASSY-BRAKE (Ref # 43082)	43082-0015	1
CLAMP,PAD (Ref # 43084)	43084-003	1
BOOT,CALIPER (Ref # 49006)	49006-1094	1
BOOT,CALIPER (Ref # 49006A)	49006-1095	1
BOLT,SOCKET,10X17 (Ref # 92002)	92002-1713	2
PIN,PAD (Ref # 92043)	92043-1640	1
SPRING,STOPPER (Ref # 92144)	92144-1831	1
SPRING,PAD (Ref # 92145)	92145-1382	1
BOLT,SOCKET,8X30 (Ref # 92150)	92150-1771	7

© 2026 Kawasaki Motors Corp., U.S.A.