2022 Ninja ZX-6R ABS KRT Edition

PARTS DIAGRAM

Ignition System

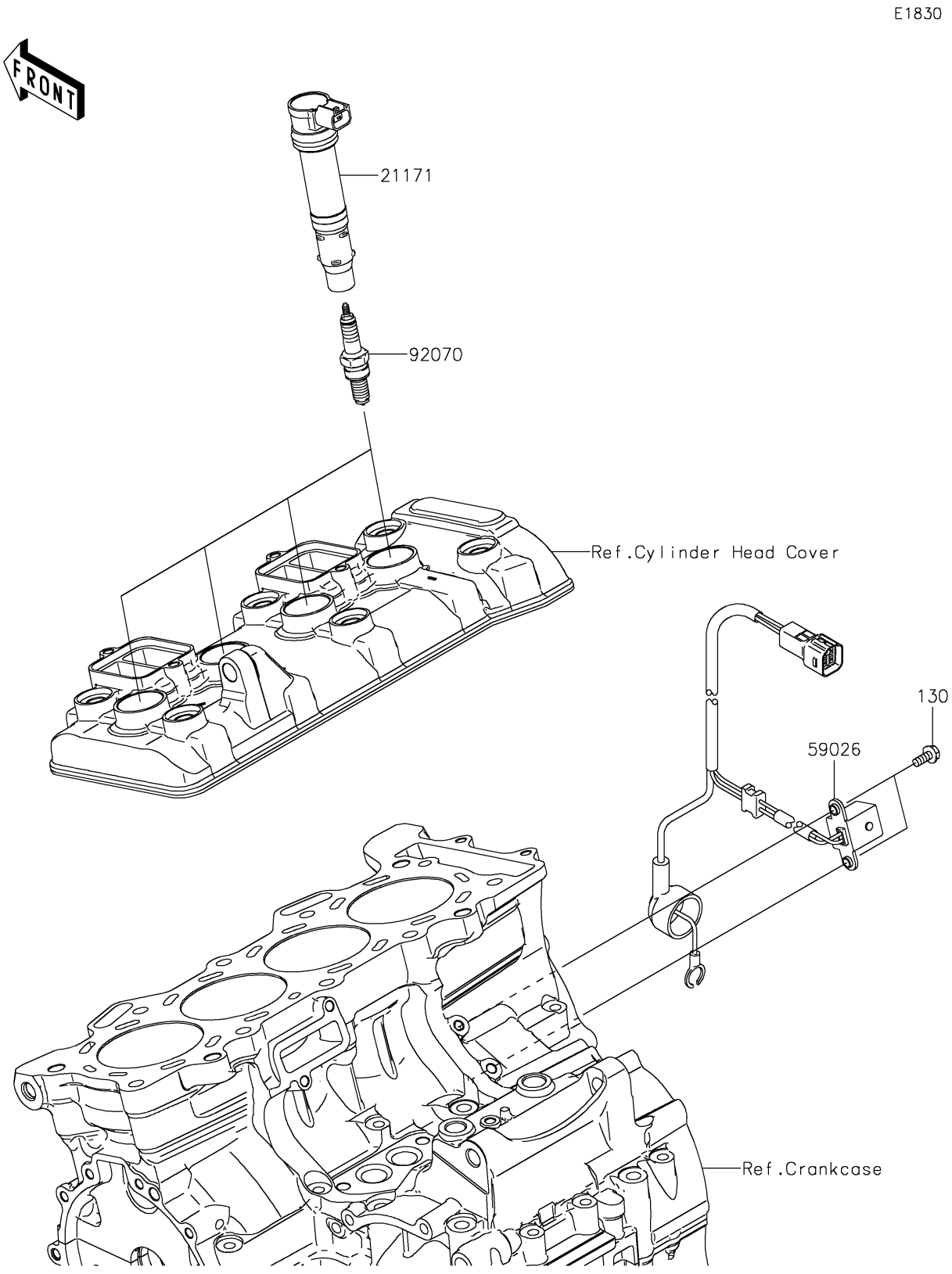

© 2026 Kawasaki Motors Corp., U.S.A.

2022 Ninja ZX-6R ABS KRT Edition

Kawasaki
Let the Good Times Roll®

PARTS LIST

Ignition System

ITEM NAME	PART NUMBER	QUANTITY

© 2026 Kawasaki Motors Corp., U.S.A.