# 2005 Vulcan 2000

## PARTS DIAGRAM

### Balancer

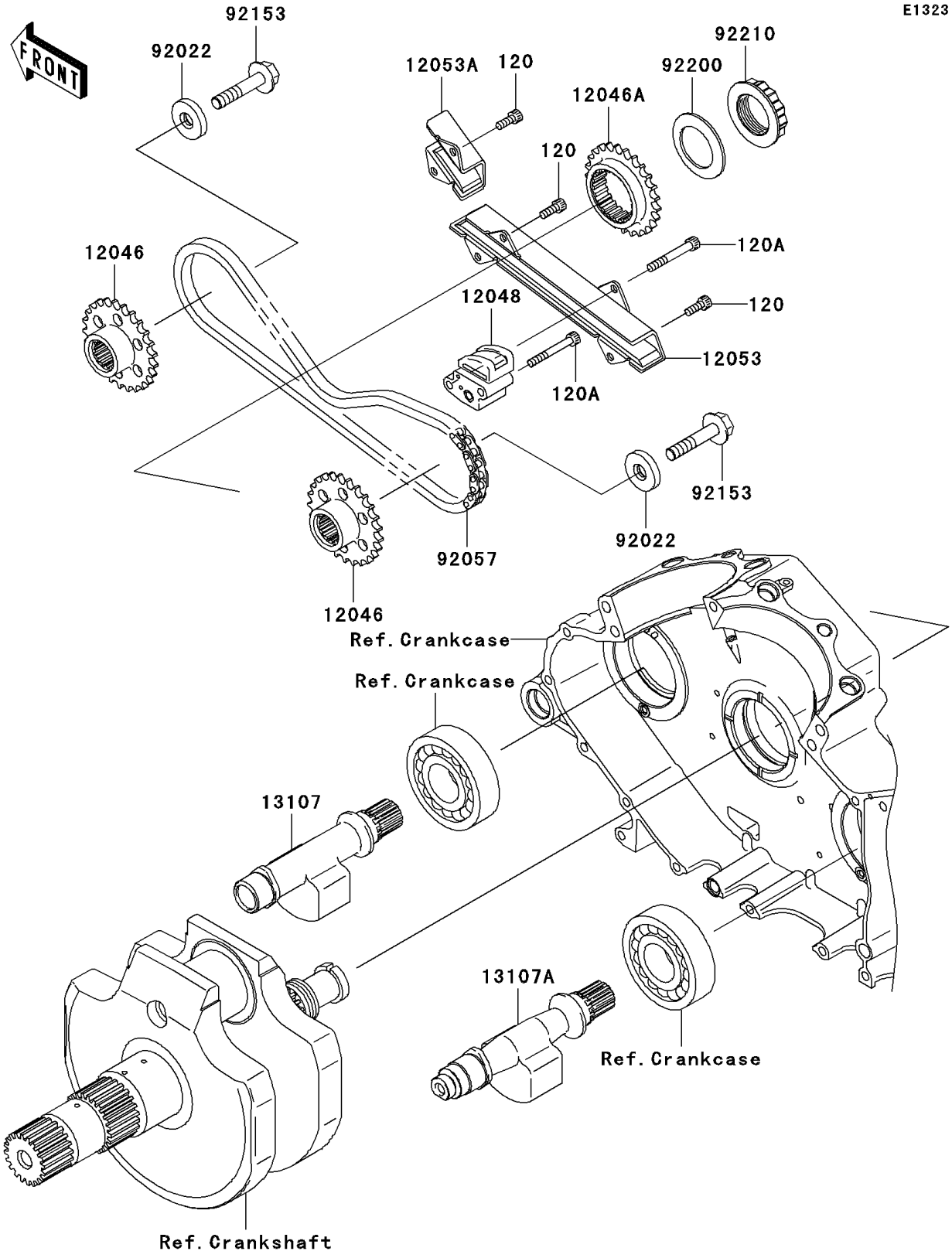


© 2026 Kawasaki Motors Corp., U.S.A.

# 2005 Vulcan 2000

## PARTS LIST

### Balancer

| ITEM NAME | PART NUMBER | QUANTITY |
|---|---|---|
| BOLT-SOCKET,6X16 (Ref # 120) | 120P0616 | 5 |
| BOLT-SOCKET,6X45 (Ref # 120A) | 120P0645 | 2 |
| SPROCKET,FR&RR (Ref # 12046) | 12046-0007 | 2 |
| SPROCKET (Ref # 12046A) | 12046-0008 | 1 |
| TENSIONER-ASSY (Ref # 12048) | 12048-0005 | 1 |
| GUIDE-CHAIN,LONG (Ref # 12053) | 12053-0003 | 1 |
| GUIDE-CHAIN,SHORT (Ref # 12053A) | 12053-0004 | 1 |
| SHAFT,FR (Ref # 13107) | 13107-0004 | 1 |
| SHAFT,RR (Ref # 13107A) | 13107-0005 | 1 |
| WASHER,10X33X6 (Ref # 92022) | 92022-1906 | 2 |
| CHAIN,DID 06HD(F) SDH (Ref # 92057) | 92057-0028 | 1 |
| BOLT,10X50 (Ref # 92153) | 92153-0317 | 2 |
| WASHER,36.5X56X3.2 (Ref # 92200) | 92200-0014 | 1 |
| NUT,36MM (Ref # 92210) | 92210-0059 | 1 |

© 2026 Kawasaki Motors Corp., U.S.A.