2005 Vulcan 2000

PARTS DIAGRAM

Balancer

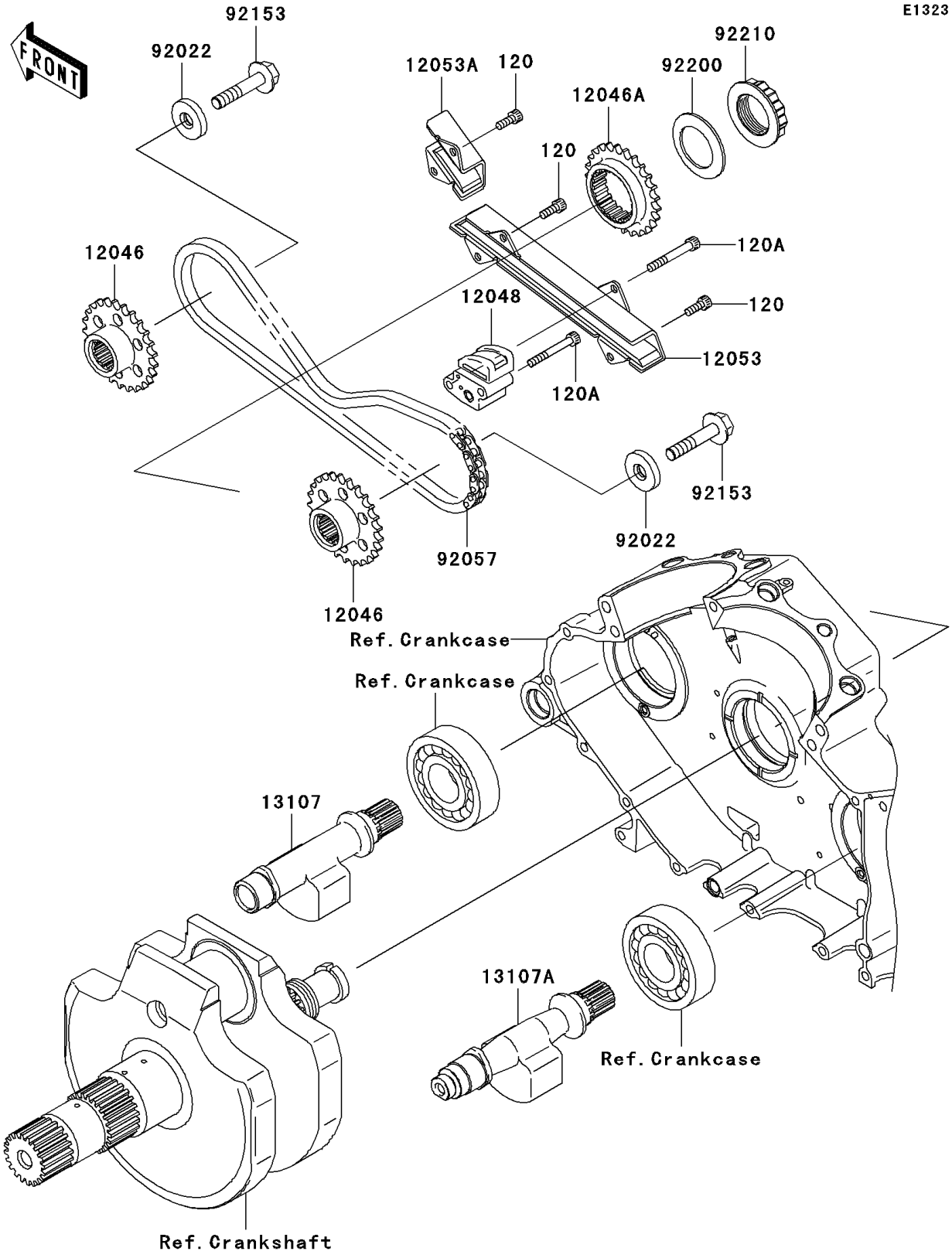

© 2026 Kawasaki Motors Corp., U.S.A.

2005 Vulcan 2000

PARTS LIST

Balancer

ITEM NAME	PART NUMBER	QUANTITY
BOLT-SOCKET,6X16 (Ref # 120)	120P0616	5
BOLT-SOCKET,6X45 (Ref # 120A)	120P0645	2
SPROCKET,FR&RR (Ref # 12046)	12046-0007	2
SPROCKET (Ref # 12046A)	12046-0008	1
TENSIONER-ASSY (Ref # 12048)	12048-0005	1
GUIDE-CHAIN,LONG (Ref # 12053)	12053-0003	1
GUIDE-CHAIN,SHORT (Ref # 12053A)	12053-0004	1
SHAFT,FR (Ref # 13107)	13107-0004	1
SHAFT,RR (Ref # 13107A)	13107-0005	1
WASHER,10X33X6 (Ref # 92022)	92022-1906	2
CHAIN,DID 06HD(F) SDH (Ref # 92057)	92057-0028	1
BOLT,10X50 (Ref # 92153)	92153-0317	2
WASHER,36.5X56X3.2 (Ref # 92200)	92200-0014	1
NUT,36MM (Ref # 92210)	92210-0059	1

© 2026 Kawasaki Motors Corp., U.S.A.