2008 Vulcan® 2000

PARTS DIAGRAM

Swingarm

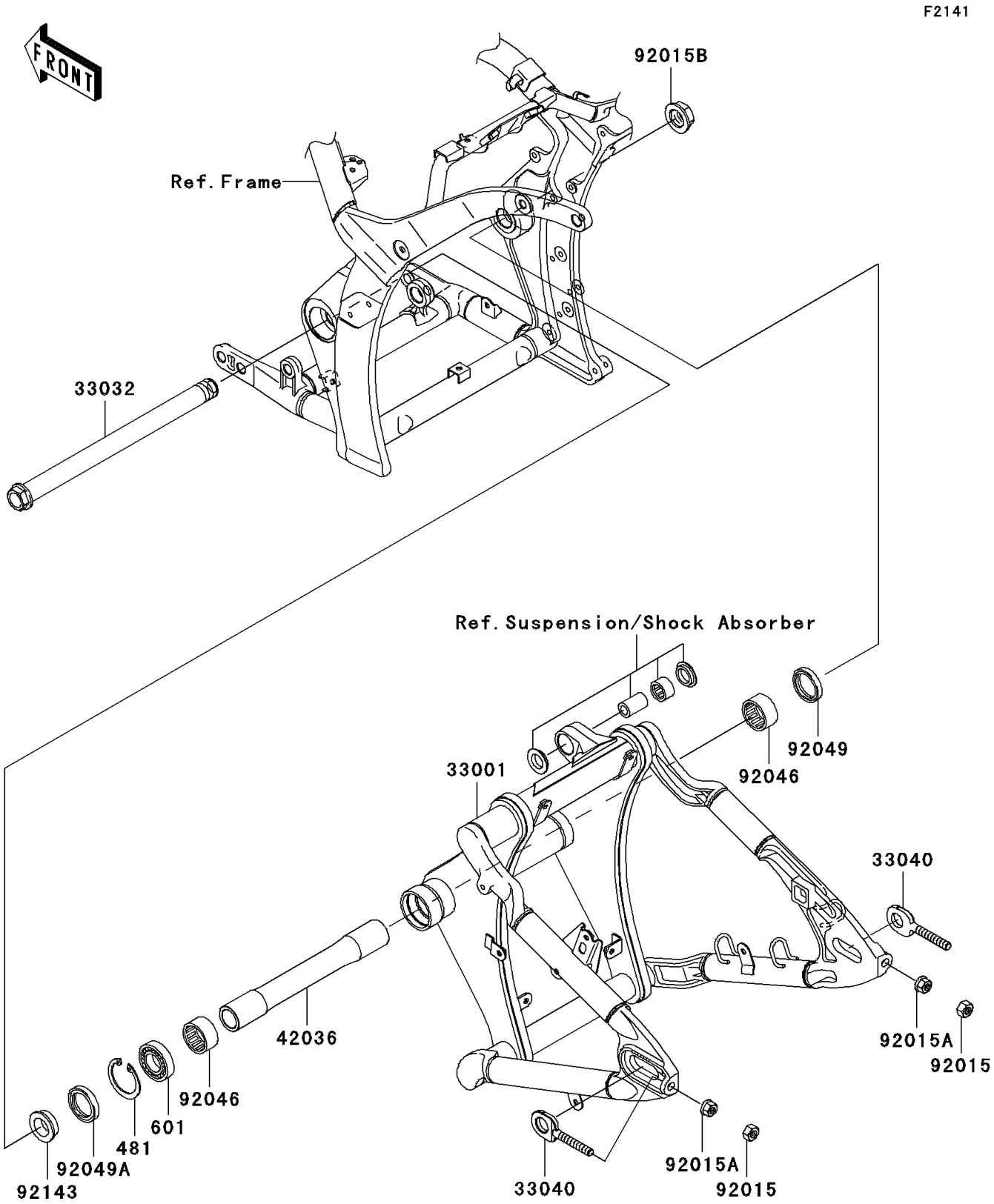

© 2026 Kawasaki Motors Corp., U.S.A.

2008 Vulcan® 2000

PARTS LIST

Swingarm

ITEM NAME	PART NUMBER	QUANTITY
CIRCLIP-TYPE-C,47MM (Ref # 481)	481J4700	1
BEARING-BALL,#6005UU (Ref # 601)	601B6005UU	1
ARM-COMP-SWING,F.S.BLACK (Ref # 33001)	33001-0147-18R	1
SHAFT-SWING ARM (Ref # 33032)	33032-0004	1
ADJUSTER-CHAIN (Ref # 33040)	33040-0005	2
SLEEVE,SWING ARM,L=266.5 (Ref # 42036)	42036-0007	1
NUT,LOCK,10MM (Ref # 92015)	92015-1494	2
NUT,FLANGED,10MM (Ref # 92015A)	92015-1727	2
NUT,FLANGED,25MM (Ref # 92015B)	92015-1845	1
BEARING-NEEDLE,BM3520 (Ref # 92046)	92046-1205	2
SEAL-OIL,KC35X45X6 (Ref # 92049)	92049-0017	1
SEAL-OIL,MHA 35X47X5 (Ref # 92049A)	92049-1381	1
COLLAR,SWING ARM,L=12.5 (Ref # 92143)	92143-1481	1

© 2026 Kawasaki Motors Corp., U.S.A.