2008 Vulcan® 2000

PARTS DIAGRAM

Starter Motor

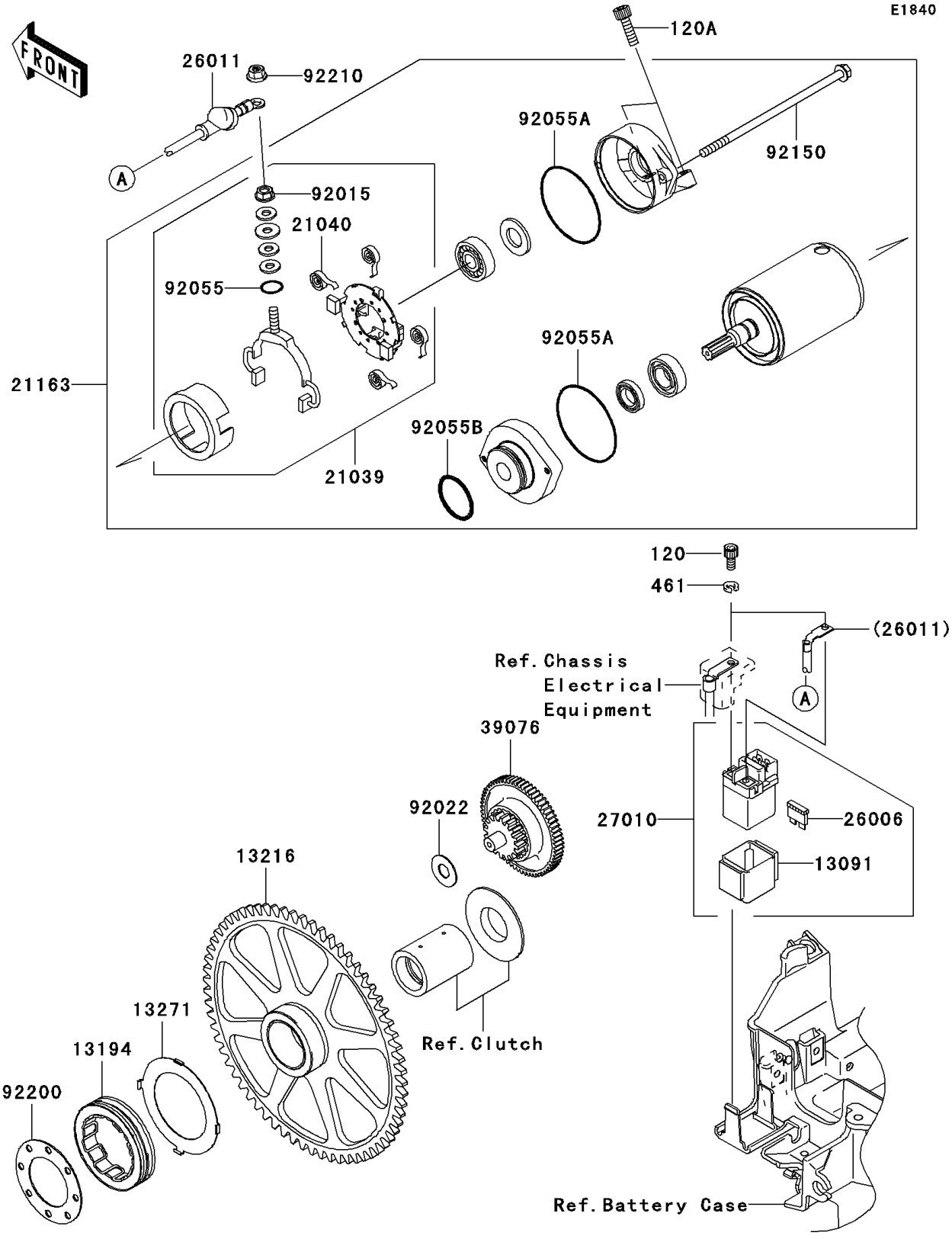

© 2026 Kawasaki Motors Corp., U.S.A.

2008 Vulcan® 2000

PARTS LIST

Starter Motor

ITEM NAME	PART NUMBER	QUANTITY
BOLT-SOCKET,5X10 (Ref # 120)	120CB0510	2
BOLT-SOCKET,6X22 (Ref # 120A)	120R0622	2
WASHER-SPRING,5MM,BLACK (Ref # 461)	461DB0500	2
HOLDER,MAGNETIC SWITCH (Ref # 13091)	13091-1884	1
CLUTCH-ONEWAY (Ref # 13194)	13194-0001	1
GEAR-COMP (Ref # 13216)	13216-0010	1
PLATE (Ref # 13271)	13271-0037	1
BRUSH,CARBON (Ref # 21039)	21039-1060	1
SPRING-BRUSH (Ref # 21040)	21040-1055	4
STARTER-ELECTRIC (Ref # 21163)	21163-0001	1
FUSE,30A-G (Ref # 26006)	26006-1006	1
WIRE-LEAD,STARTER MOTOR (Ref # 26011)	26011-0044	1
SWITCH,MAGNETIC (Ref # 27010)	27010-1327	1
LIMITER,STARTER IDLE GEAR (Ref # 39076)	39076-0001	1
NUT,STARTER MOTOR (Ref # 92015)	92015-1476	1
WASHER,12X27.5X1.0 (Ref # 92022)	92022-1852	1
RING-O,4.5X2.0 (Ref # 92055)	92055-1370	1
RING-O,STARTER MOTOR (Ref # 92055A)	92055-1381	2
RING-O,37MM (Ref # 92055B)	92055-1393	1
BOLT,STARTER MOTOR (Ref # 92150)	92150-1913	2
WASHER,44X73.5X1.2 (Ref # 92200)	92200-0019	1
NUT,6MM (Ref # 92210)	92210-0188	1

© 2026 Kawasaki Motors Corp., U.S.A.