2021 VULCAN® 900 CUSTOM

PARTS DIAGRAM

Front Wheel

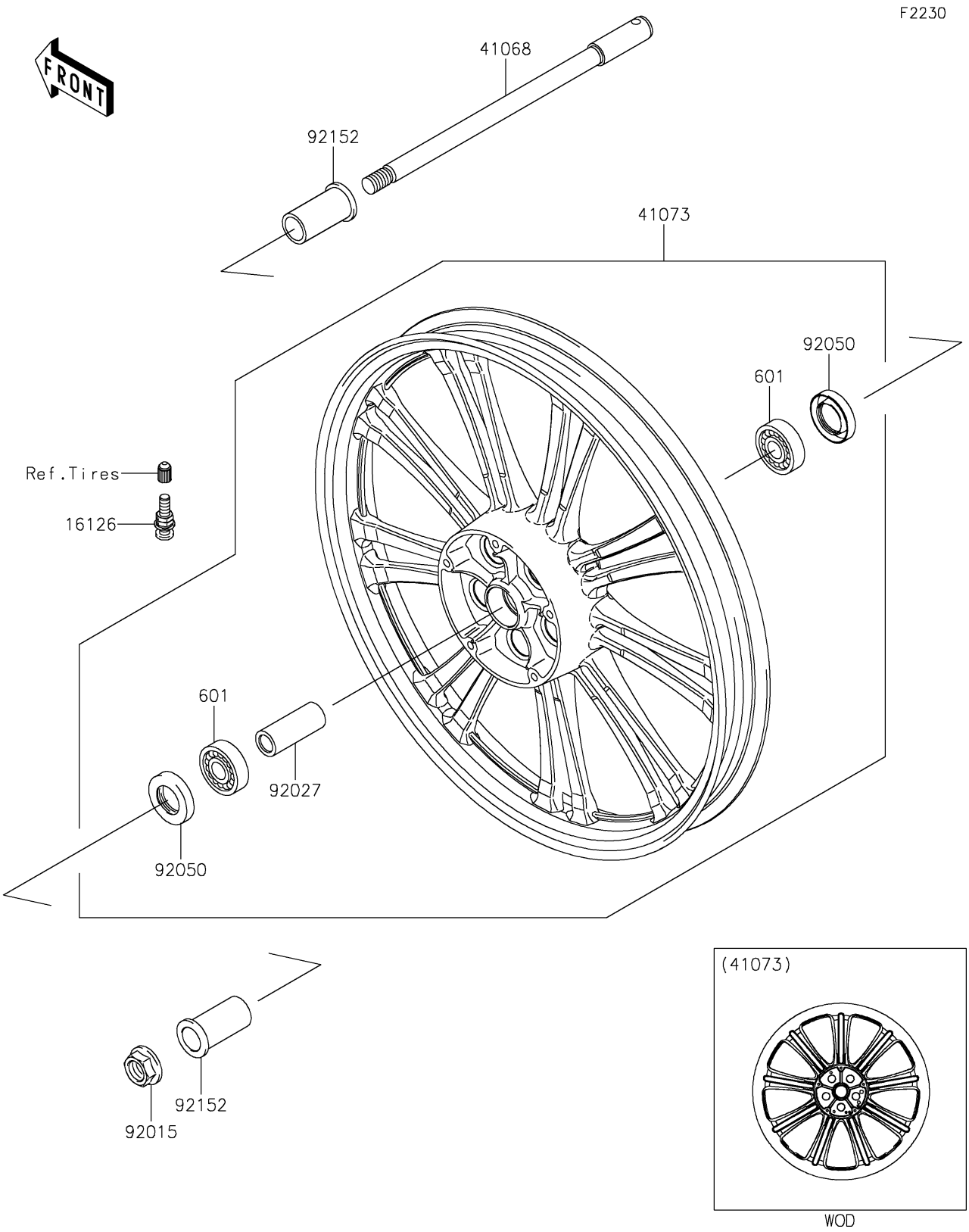

© 2026 Kawasaki Motors Corp., U.S.A.

2021 VULCAN® 900 CUSTOM

PARTS LIST

Front Wheel

ITEM NAME	PART NUMBER	QUANTITY
VALVE (Ref # 16126)	16126-1417	1
AXLE,FR (Ref # 41068)	41068-0058	1
WHEEL-ASSY,FR,G.BLACK (Ref # 41073)	41073-0182-18F	1
NUT,FLANGED,18MM (Ref # 92015)	92015-1993	1
COLLAR,20.2X28X70 (Ref # 92027)	92027-1752	1
SEAL-OIL,26X42X8 (Ref # 92050)	92050-060	2
COLLAR,FR AXLE,L=53 (Ref # 92152)	92152-0349	2
BEARING-BALL,#6004UUC3 (Ref # 601)	601B6004UU	2

© 2026 Kawasaki Motors Corp., U.S.A.