2021 VULCAN® 900 CUSTOM

PARTS DIAGRAM

Engine Cover(s)

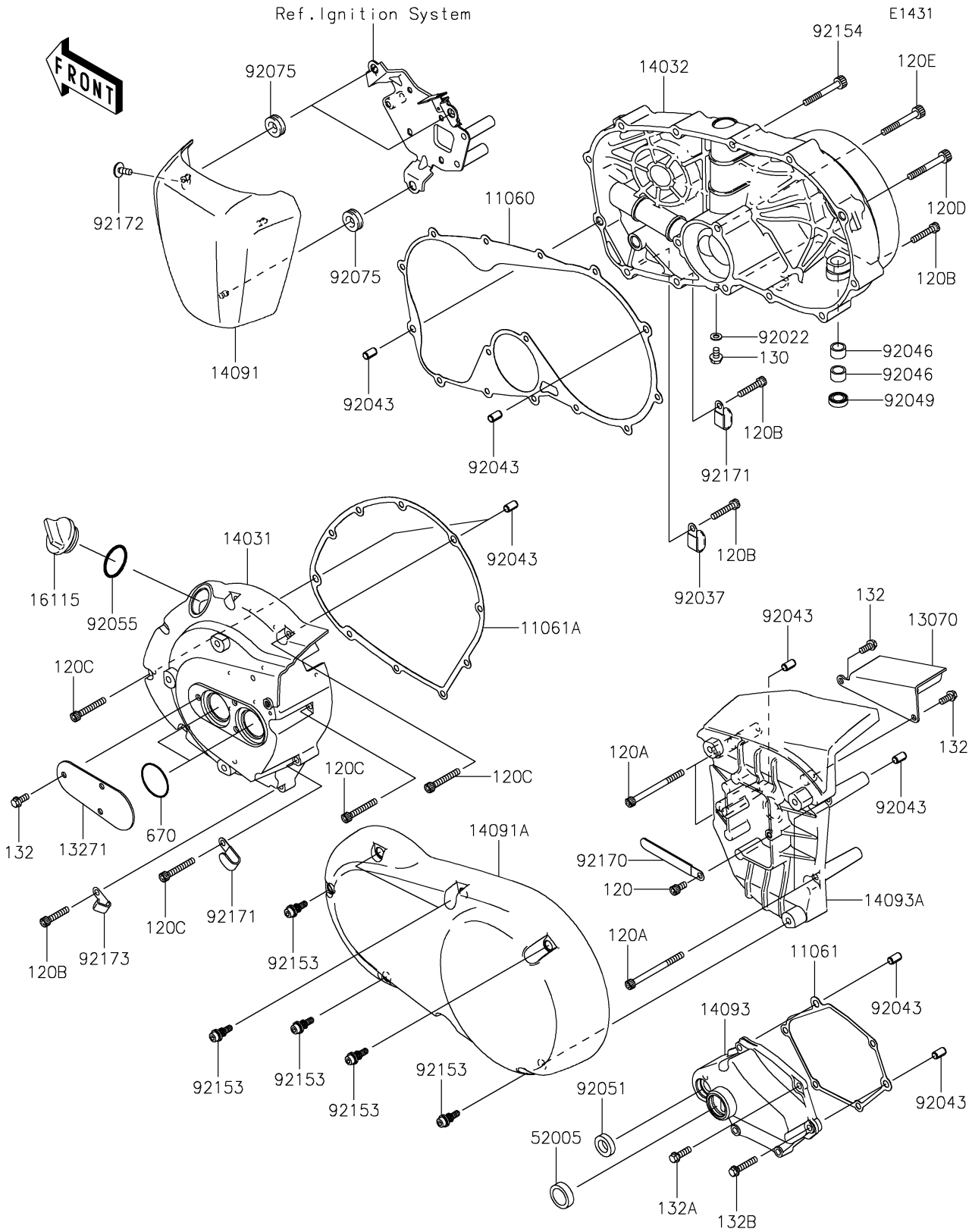

© 2026 Kawasaki Motors Corp., U.S.A.

2021 VULCAN® 900 CUSTOM

PARTS LIST

Engine Cover(s)

ITEM NAME	PART NUMBER	QUANTITY
GASKET,CLUTCH COVER (Ref # 11060)	11060-1926	1
GASKET,MECHANISM COVER (Ref # 11061)	11061-0208	1
GASKET,GENERATOR COVER (Ref # 11061A)	11061-0209	1
GUIDE,BELT (Ref # 13070)	13070-0055	1
PLATE (Ref # 13271)	13271-0700	1
COVER-GENERATOR (Ref # 14031)	14031-0620	1
COVER-CLUTCH (Ref # 14032)	14032-0135	1
COVER,IGNITION COIL,EBONY (Ref # 14091)	14091-0882-H8	1
COVER,OUTER,LH (Ref # 14091A)	14091-1737	1
COVER,CHANGE MECHANISM (Ref # 14093)	14093-0673	1
COVER,PULLEY (Ref # 14093A)	14093-0674	1
CAP-OIL FILLER (Ref # 16115)	16115-1009	1
GAUGE,OIL LEVEL (Ref # 52005)	52005-1009	1
WASHER,6.1X12X1 (Ref # 92022)	92022-077	1
CLAMP,L=45 (Ref # 92037)	92037-1539	1
PIN,6.2X8X14 (Ref # 92043)	92043-1263	8
BEARING-NEEDLE,HK1210FM (Ref # 92046)	92046-0034	2
SEAL-OIL,TB12205.5 (Ref # 92049)	92049-1271	1
SEAL-OIL,TB13225.5 (Ref # 92051)	92051-005	1
RING-O,31.5X2.6 (Ref # 92055)	92055-049	1
DAMPER (Ref # 92075)	92075-1629	3
BOLT,SOCKET,6X22 (Ref # 92153)	92153-1331	6
BOLT,SOCKET,6X50 (Ref # 92154)	92154-0270	1
CLAMP (Ref # 92170)	92170-1925	1
CLAMP (Ref # 92171)	92171-0739	2
SCREW,5X12 (Ref # 92172)	92172-0101	1
CLAMP,HARNESS (Ref # 92173)	92173-1368	1
BOLT-SOCKET,6X12 (Ref # 120)	120CA0612	1
BOLT-SOCKET,6X75 (Ref # 120A)	120CA0675	4

© 2026 Kawasaki Motors Corp., U.S.A.

2021 VULCAN® 900 CUSTOM

PARTS LIST

Engine Cover(s)

ITEM NAME	PART NUMBER	QUANTITY
BOLT-SOCKET,6X30 (Ref # 120B)	120CC0630	9
BOLT-SOCKET,6X40 (Ref # 120C)	120CC0640	4
BOLT-SOCKET,6X50 (Ref # 120D)	120CC0650	10
BOLT-SOCKET,6X65 (Ref # 120E)	120CC0665	1
BOLT-FLANGED,6X10 (Ref # 130)	130BA0610	1
BOLT-FLANGED-SMALL,6X14 (Ref # 132)	132BA0614	5
BOLT-FLANGED-SMALL,6X20 (Ref # 132A)	132BA0620	1
BOLT-FLANGED-SMALL,6X30 (Ref # 132B)	132BA0630	5
O RING,34MM (Ref # 670)	670B3034	2

© 2026 Kawasaki Motors Corp., U.S.A.