2021 VULCAN® 900 CUSTOM

PARTS DIAGRAM

Transmission

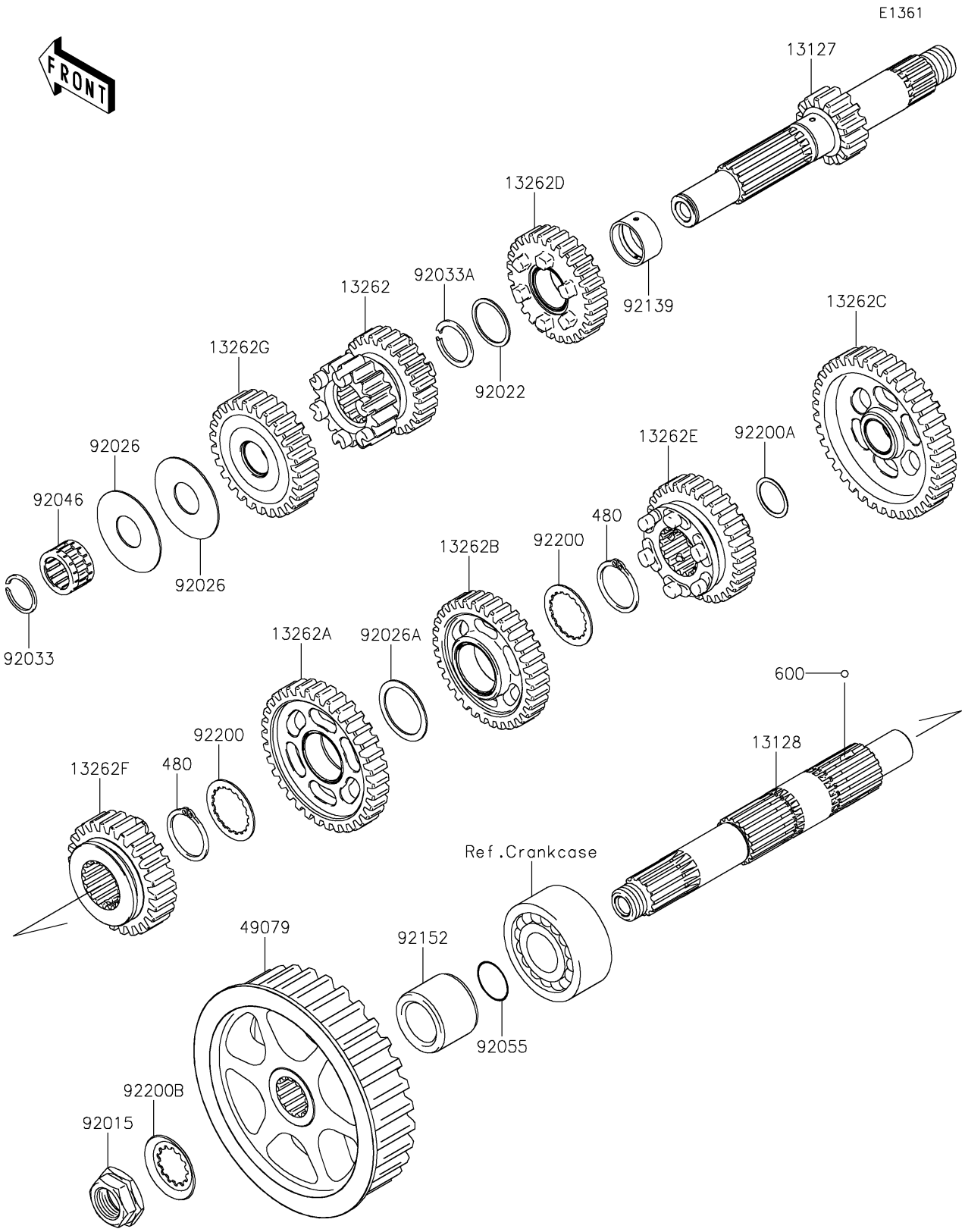

© 2026 Kawasaki Motors Corp., U.S.A.

2021 VULCAN® 900 CUSTOM

PARTS LIST

Transmission

ITEM NAME	PART NUMBER	QUANTITY
SHAFT-TRANSMISSION INPUT,14T (Ref # 13127)	13127-0038	1
SHAFT-TRANSMISSION OUTPUT (Ref # 13128)	13128-0025	1
GEAR,INPUT 2ND&3RD,18T&25T (Ref # 13262)	13262-0315	1
GEAR,OUTPUT 2ND,34T (Ref # 13262A)	13262-0319	1
GEAR,OUTPUT 3RD,34T (Ref # 13262B)	13262-0320	1
GEAR,OUTPUT LOW,39T (Ref # 13262C)	13262-0419	1
GEAR,INPUT 4TH,28T (Ref # 13262D)	13262-0496	1
GEAR,OUTPUT 4TH,31T (Ref # 13262E)	13262-0497	1
GEAR,OUTPUT 5TH,26T (Ref # 13262F)	13262-0701	1
GEAR,INPUT 5TH,27T (Ref # 13262G)	13262-0703	1
PULLEY-BELT (Ref # 49079)	49079-0016	1
NUT,20MM (Ref # 92015)	92015-1963	1
WASHER,25.3X30X1 (Ref # 92022)	92022-161	1
SPACER,20X51X1 (Ref # 92026)	92026-0102	2
SPACER,30X38X1.0 (Ref # 92026A)	92026-079	1
RING-SNAP,20MM (Ref # 92033)	92033-015	1
RING-SNAP,24MM (Ref # 92033A)	92033-026	1
BEARING-NEEDLE,PK20X27X17X3 (Ref # 92046)	92046-1303	1
RING-O (Ref # 92055)	92055-035	1
BUSHING,4TH GEAR (Ref # 92139)	92139-0186	1
COLLAR (Ref # 92152)	92152-0335	1
WASHER,30.3X38X1.0 (Ref # 92200)	92200-0222	2
WASHER,20.2X25.0X0.5 (Ref # 92200A)	92200-0291	1
WASHER (Ref # 92200B)	92200-0863	1
CIRCLIP (Ref # 480)	480J2900	2
BALL-STEEL,5/32 (Ref # 600)	600A0500	3

© 2026 Kawasaki Motors Corp., U.S.A.