2021 Vulcan 900 Custom

PARTS DIAGRAM

Cylinder/Piston(s)

Kawasaki
Let the Good Times Roll®

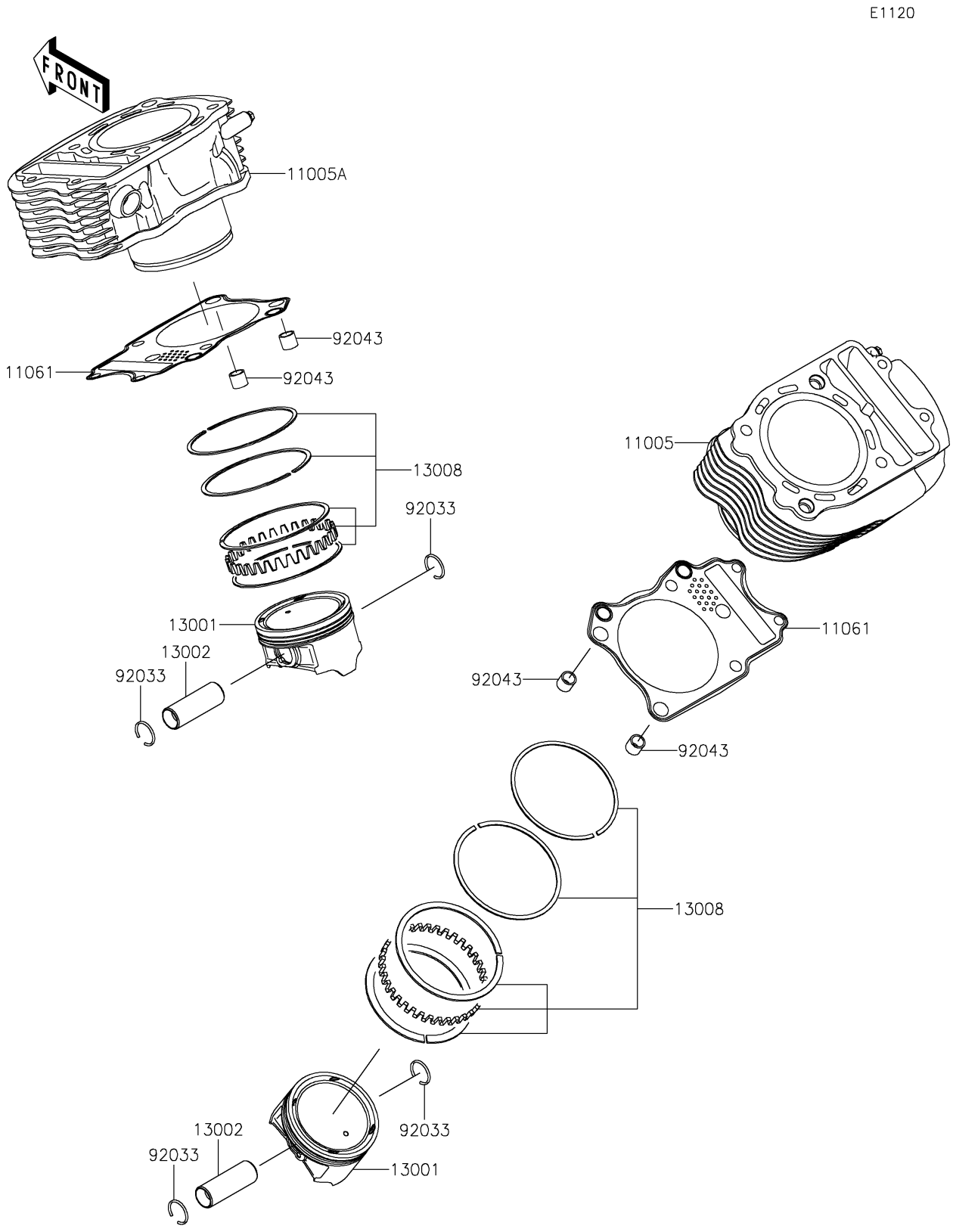

© 2026 Kawasaki Motors Corp., U.S.A.

2021 Vulcan 900 Custom

PARTS LIST

Cylinder/Piston(s)

ITEM NAME	PART NUMBER	QUANTITY

© 2026 Kawasaki Motors Corp., U.S.A.