2008 Vulcan® 2000

PARTS DIAGRAM

Generator

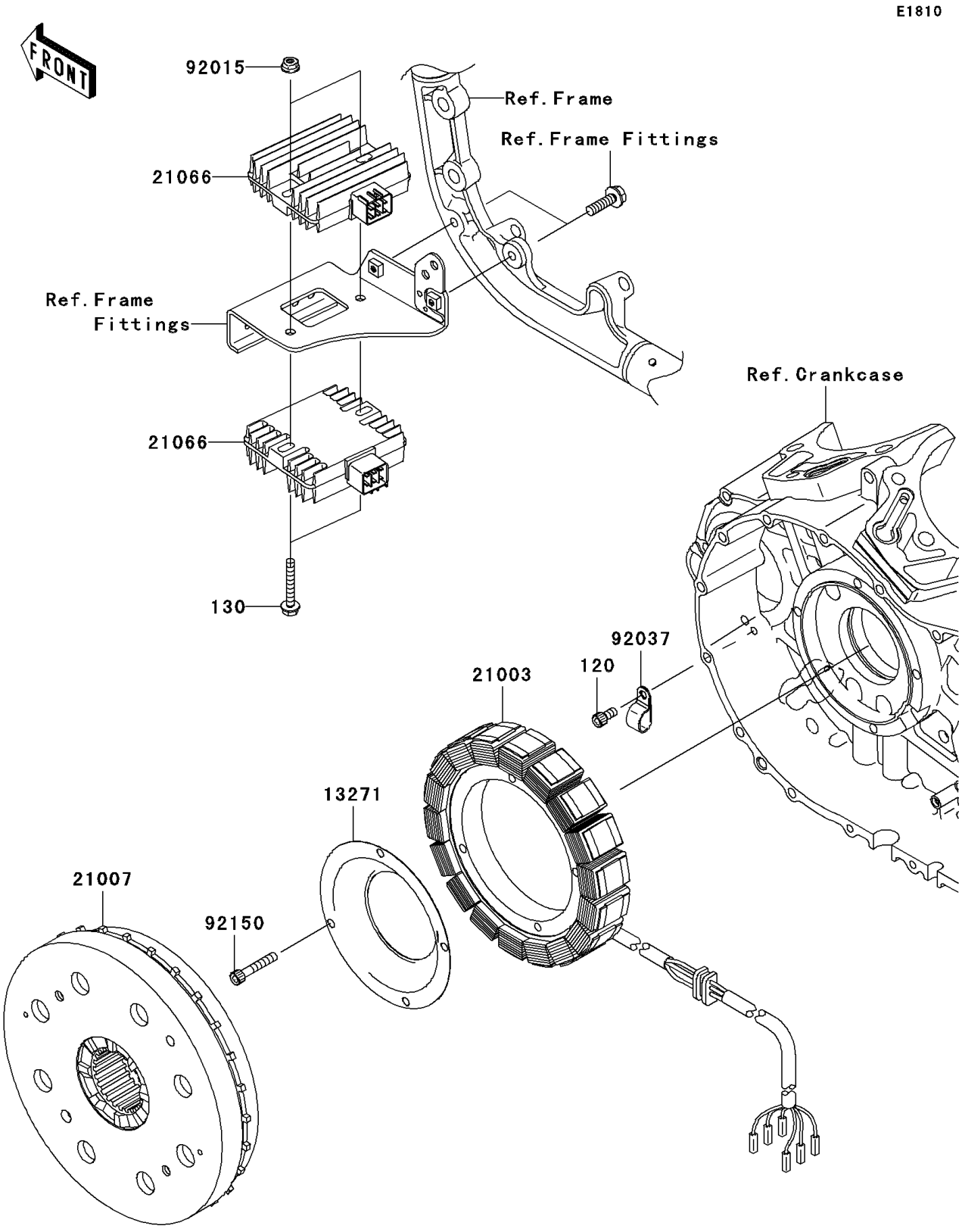

© 2026 Kawasaki Motors Corp., U.S.A.

2008 Vulcan® 2000

PARTS LIST

Generator

ITEM NAME	PART NUMBER	QUANTITY
BOLT-SOCKET,6X12 (Ref # 120)	120R0612	1
BOLT-FLANGED,6X40 (Ref # 130)	130BB0640	2
PLATE (Ref # 13271)	13271-0066	1
STATOR (Ref # 21003)	21003-0029	1
ROTOR (Ref # 21007)	21007-0047	1
REGULATOR-VOLTAGE (Ref # 21066)	21066-0012	2
NUT,6MM (Ref # 92015)	92015-1386	2
CLAMP (Ref # 92037)	92037-1608	1
BOLT,SOCKET,6X35 (Ref # 92150)	92150-1484	4

© 2026 Kawasaki Motors Corp., U.S.A.