2009 Vulcan® 2000

PARTS DIAGRAM

Gear Change Drum/Shift Fork(s)

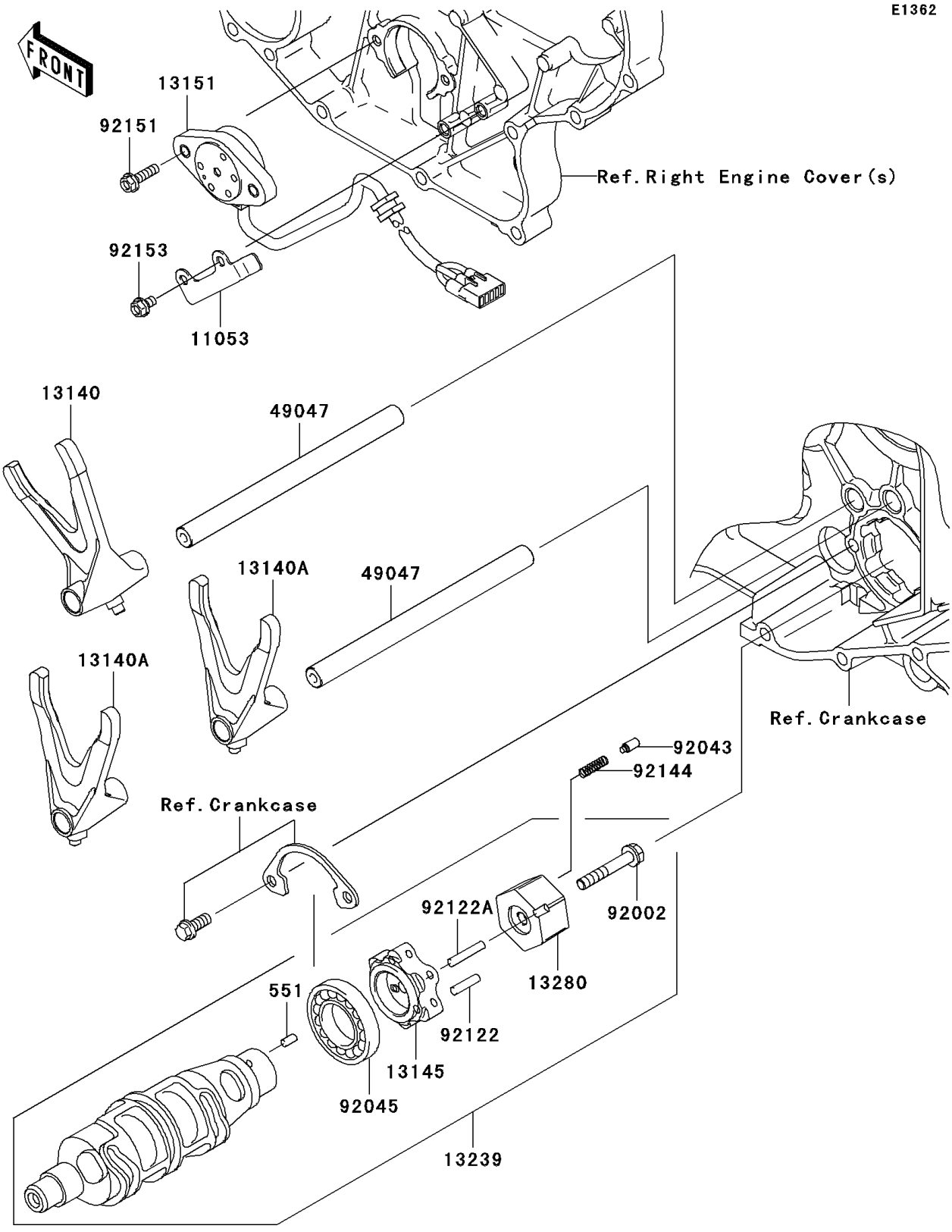

© 2026 Kawasaki Motors Corp., U.S.A.

2009 Vulcan® 2000

PARTS LIST

Gear Change Drum/Shift Fork(s)

ITEM NAME	PART NUMBER	QUANTITY
PIN-DOWEL,4X8 (Ref # 551)	551A0408	1
BRACKET,SENSOR WIRE (Ref # 11053)	11053-0506	1
FORK-SHIFT,INPUT (Ref # 13140)	13140-0001	1
FORK-SHIFT,OUTPUT (Ref # 13140A)	13140-0002	2
CAM-CHANGE DRUM (Ref # 13145)	13145-0016	1
SWITCH-COMP,NEUTRAL (Ref # 13151)	13151-0032	1
DRUM-ASSY-CHANGE (Ref # 13239)	13239-0013	1
HOLDER (Ref # 13280)	13280-0106	1
ROD-SHIFT (Ref # 49047)	49047-0002	2
BOLT,6X38 (Ref # 92002)	92002-1431	1
PIN (Ref # 92043)	92043-0085	1
BEARING-BALL,16005(NTN) (Ref # 92045)	92045-1045	1
ROLLER,4.5X17.8 (Ref # 92122)	92122-0001	5
ROLLER,4.5X23.8 (Ref # 92122A)	92122-0010	1
SPRING (Ref # 92144)	92144-1245	1
BOLT (Ref # 92151)	92151-1776	2
BOLT,5X10 (Ref # 92153)	92153-0687	2

© 2026 Kawasaki Motors Corp., U.S.A.