2006 Vulcan 1500 Classic

PARTS DIAGRAM

Front Wheel

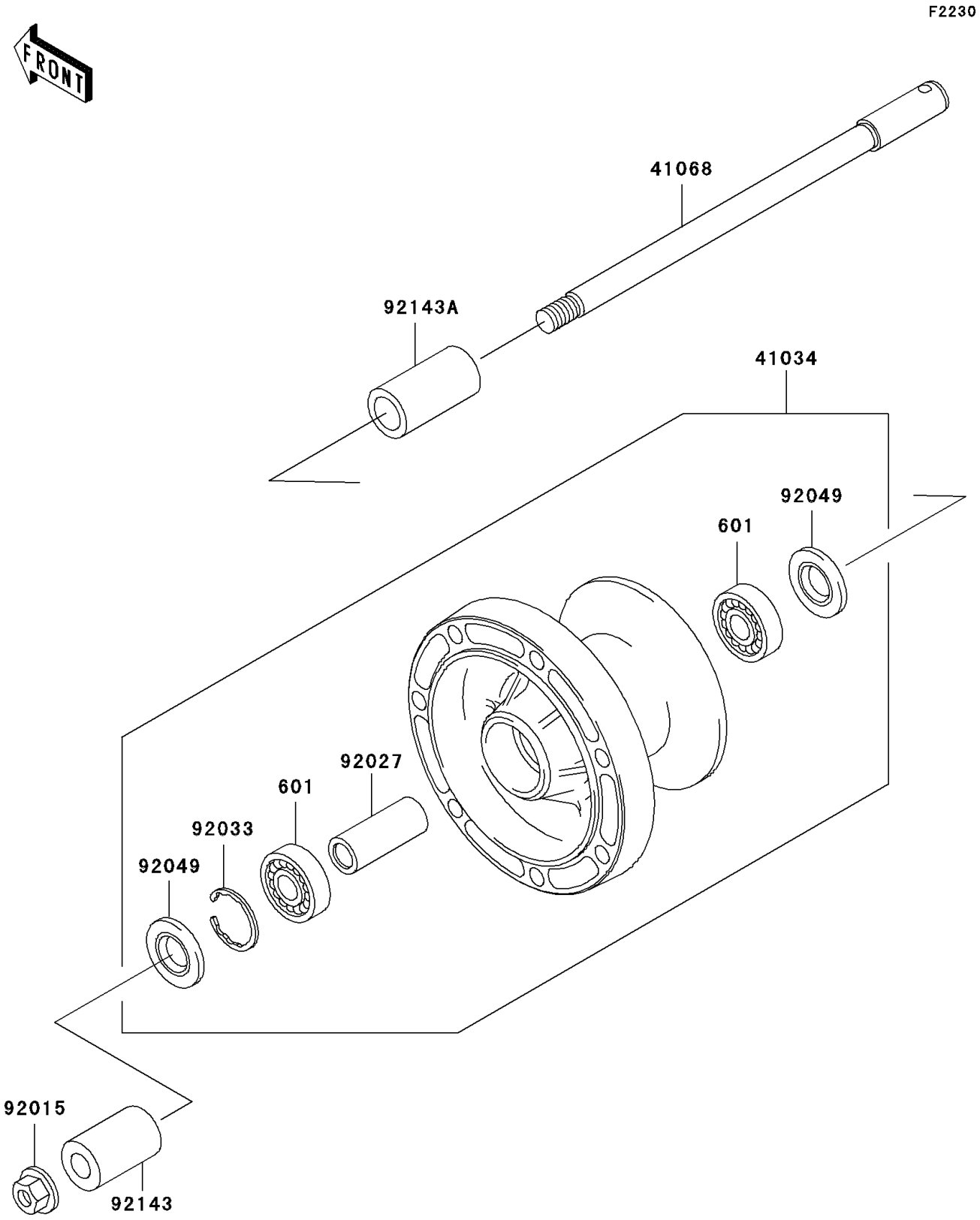

© 2026 Kawasaki Motors Corp., U.S.A.

2006 Vulcan 1500 Classic

PARTS LIST

Front Wheel

ITEM NAME	PART NUMBER	QUANTITY
BEARING-BALL,#6004UUC3 (Ref # 601)	601B6004UU	2
DRUM-ASSY,FRONT BRAKE (Ref # 41034)	41034-1266	1
AXLE,FR (Ref # 41068)	41068-1378	1
NUT,FLANGED,18MM (Ref # 92015)	92015-1993	1
COLLAR,20.2X28X70 (Ref # 92027)	92027-1752	1
RING-SNAP,42MM (Ref # 92033)	92033-1041	1
SEAL-OIL,BJN30427-C3 (Ref # 92049)	92049-1057	2
COLLAR,FR AXLE,LH,L=48.5 (Ref # 92143)	92143-1837	1
COLLAR,FR AXLE,RH,L=57.5 (Ref # 92143A)	92143-1854	1

© 2026 Kawasaki Motors Corp., U.S.A.