2008 Vulcan® 2000

PARTS DIAGRAM

Clutch

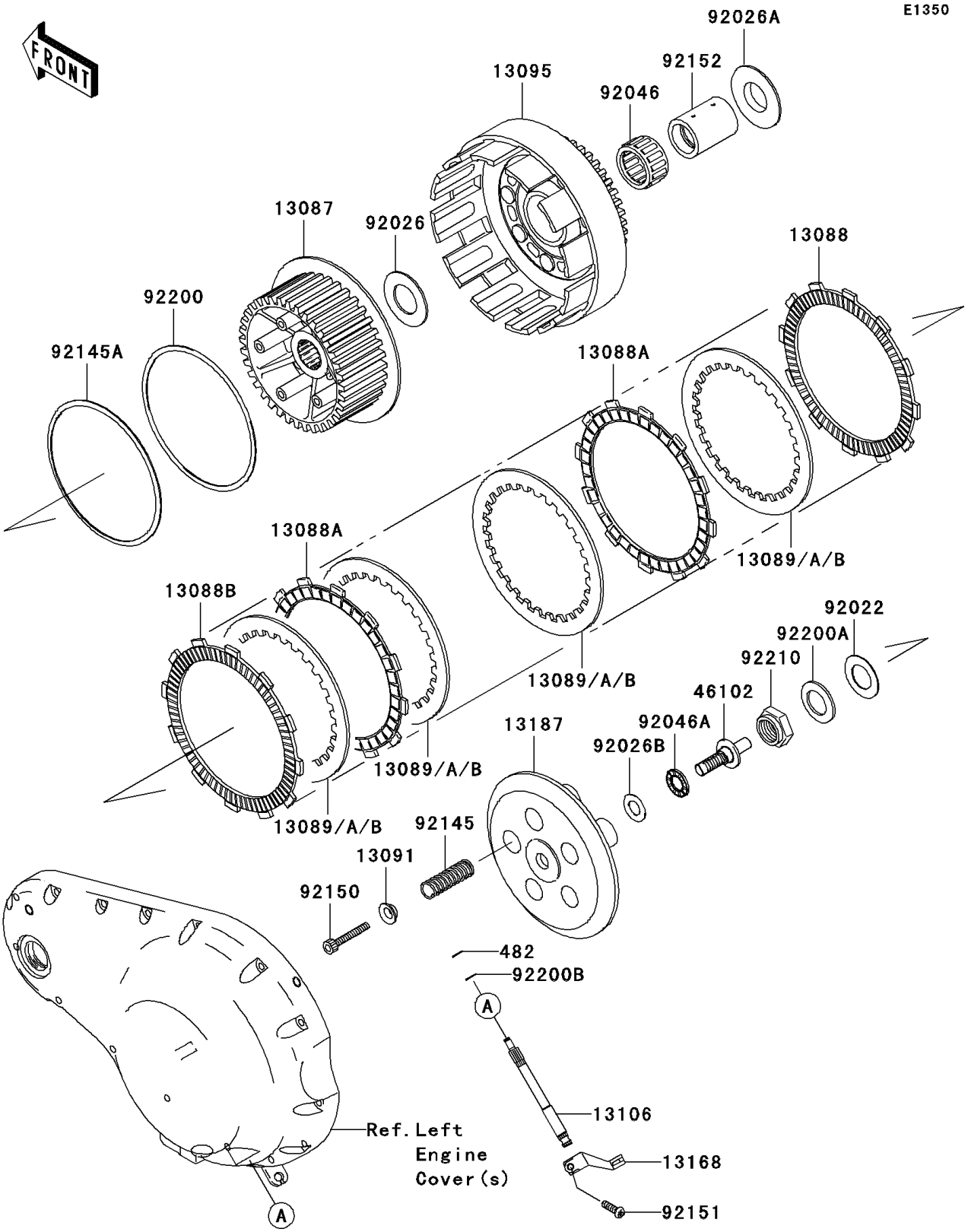

© 2026 Kawasaki Motors Corp., U.S.A.

2008 Vulcan® 2000

PARTS LIST

Clutch

ITEM NAME	PART NUMBER	QUANTITY
CIRCLIP-TYPE-E (Ref # 482)	482J5000	1
HUB-CLUTCH (Ref # 13087)	13087-0005	1
PLATE-FRICTION (Ref # 13088)	13088-0001	1
PLATE-FRICTION (Ref # 13088A)	13088-0011	8
PLATE-FRICTION (Ref # 13088B)	13088-1146	1
PLATE-CLUTCH,T=2.0 (Ref # 13089)	13089-1075	9
PLATE-CLUTCH,T=1.6 (Ref # 13089A)	13089-1080	AR
PLATE-CLUTCH,T=2.3 (Ref # 13089B)	13089-1081	AR
HOLDER,CLUTCH SPRING (Ref # 13091)	13091-1041	5
HOUSING-COMP-CLUTCH (Ref # 13095)	13095-0001	1
SHAFT-CLUTCH RELEASE (Ref # 13106)	13106-0002	1
LEVER,CLUTCH (Ref # 13168)	13168-0006	1
PLATE-CLUTCH OPERATING (Ref # 13187)	13187-0002	1
ROD,CLUTCH RELEASE (Ref # 46102)	46102-0013	1
WASHER,25.3X44X1 (Ref # 92022)	92022-1390	1
SPACER,30.5X56X2 (Ref # 92026)	92026-0008	1
SPACER,30.2X64X8.5 (Ref # 92026A)	92026-0009	1
SPACER,15X28X1 (Ref # 92026B)	92026-1238	1
BEARING-NEEDLE,K40X48X25V3 (Ref # 92046)	92046-0001	1
BEARING-NEEDLE,AXK1102 (Ref # 92046A)	92046-1052	1
SPRING,CLUTCH (Ref # 92145)	92145-0032	5
SPRING (Ref # 92145A)	92145-0033	1
BOLT,CLUTCH OPERATING (Ref # 92150)	92150-1855	5
BOLT,SOCKET,6X20 (Ref # 92151)	92151-1749	1
COLLAR,30X40X52.3 (Ref # 92152)	92152-0190	1
WASHER,140.1X150X1.2 (Ref # 92200)	92200-0015	1
WASHER,25.5X42X2.6 (Ref # 92200A)	92200-0016	1
WASHER,7.7X13X1.0 (Ref # 92200B)	92200-1107	1
NUT,25MM (Ref # 92210)	92210-0138	1

© 2026 Kawasaki Motors Corp., U.S.A.