2006 Vulcan 1500 Classic

PARTS DIAGRAM

Footrests

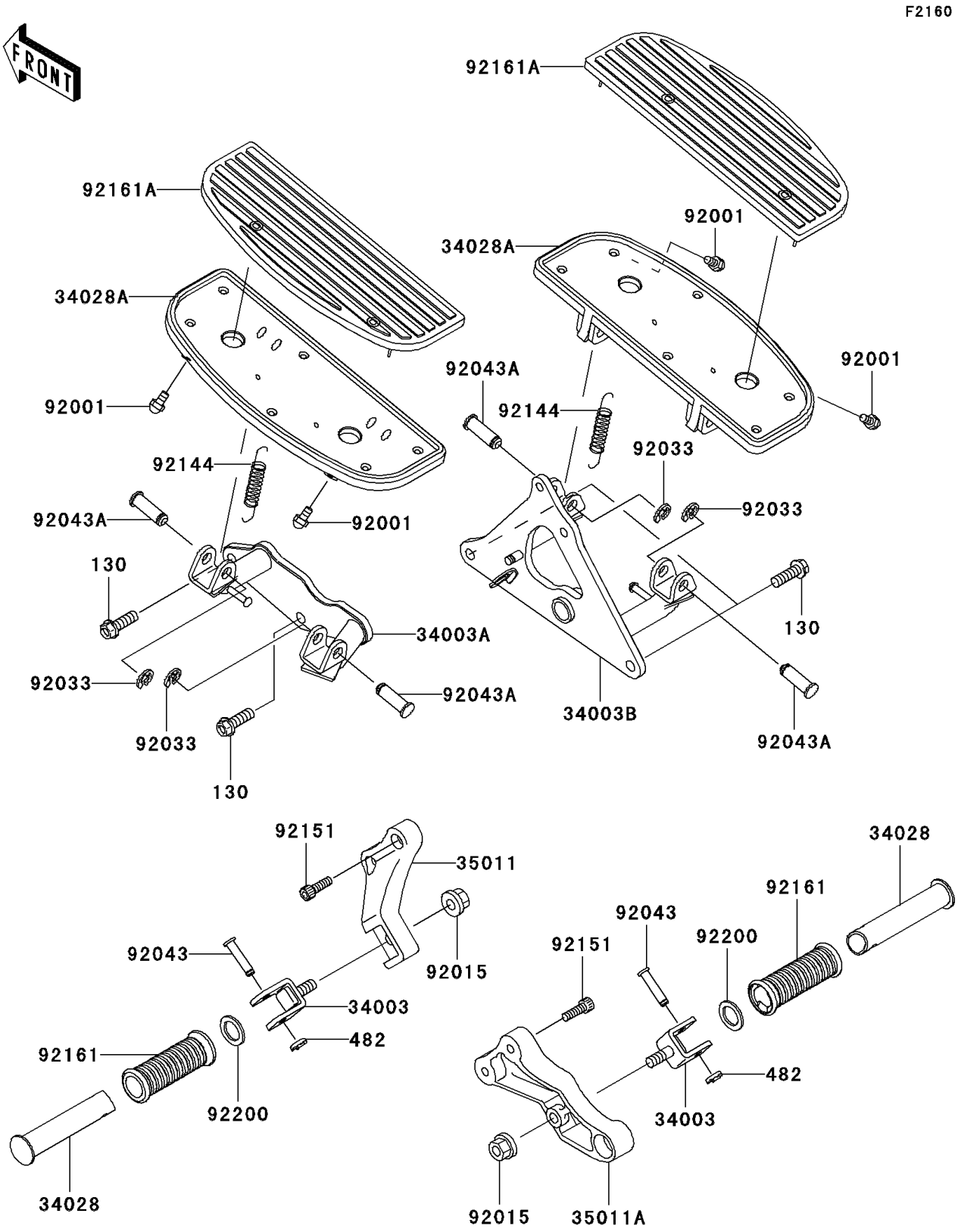

© 2026 Kawasaki Motors Corp., U.S.A.

2006 Vulcan 1500 Classic

PARTS LIST

Footrests

ITEM NAME	PART NUMBER	QUANTITY
BOLT-FLANGED,10X30 (Ref # 130)	130J1030	4
CIRCLIP-TYPE-E (Ref # 482)	482L7000	2
HOLDER-STEP,RR (Ref # 34003)	34003-0015	2
HOLDER-STEP,FR,LH (Ref # 34003A)	34003-1501	1
HOLDER-STEP,FR,RH (Ref # 34003B)	34003-1502	1
STEP,RR (Ref # 34028)	34028-0017	2
STEP,FR (Ref # 34028A)	34028-1497	2
STAY,REAR STEP,LH (Ref # 35011)	35011-1770	1
STAY,REAR STEP,RH (Ref # 35011A)	35011-1922	1
BOLT,BANK SENSOR (Ref # 92001)	92001-1905	4
NUT,FLANGED,10MM (Ref # 92015)	92015-1428	2
RING-SNAP,10MM (Ref # 92033)	92033-1166	4
PIN,8X36.5 (Ref # 92043)	92043-1339	2
PIN,12X37 (Ref # 92043A)	92043-1358	4
SPRING (Ref # 92144)	92144-1266	2
BOLT,SOCKET,8X25 (Ref # 92151)	92151-1525	4
DAMPER,STEP (Ref # 92161)	92161-0232	2
DAMPER,FRONT STEP (Ref # 92161A)	92161-1154	2
WASHER,22.5X33X2.3 (Ref # 92200)	92200-1482	2

© 2026 Kawasaki Motors Corp., U.S.A.