2008 Vulcan® 2000

PARTS DIAGRAM

Camshaft(s)/Tensioner

E1230

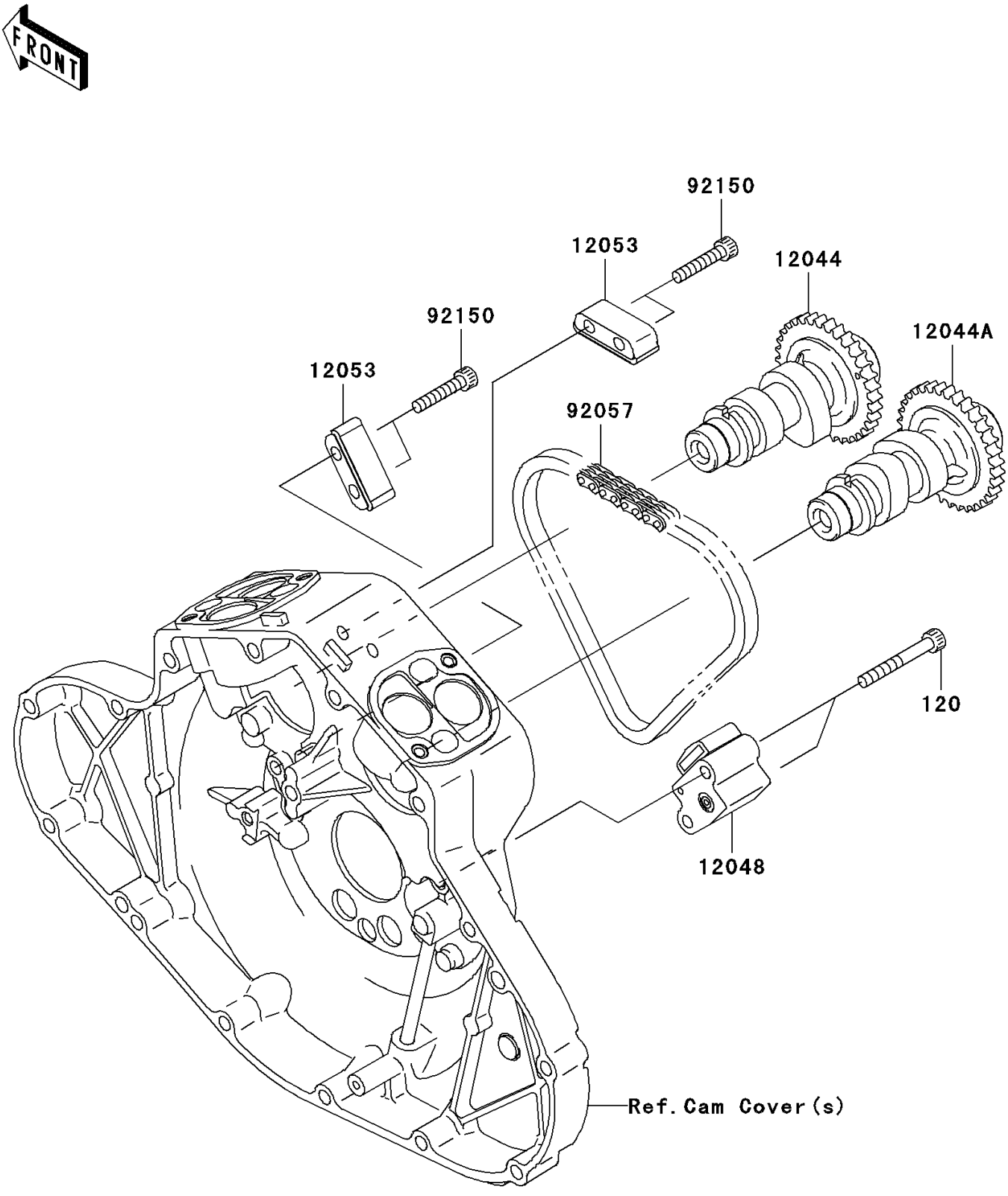

© 2026 Kawasaki Motors Corp., U.S.A.

2008 Vulcan® 2000

PARTS LIST

Camshaft(s)/Tensioner

ITEM NAME	PART NUMBER	QUANTITY
BOLT-SOCKET,6X45 (Ref # 120)	120CA0645	2
CAMSHAFT-VALVE,FR (Ref # 12044)	12044-0005	1
CAMSHAFT-VALVE,RR (Ref # 12044A)	12044-0006	1
TENSIONER-ASSY,CAM CHAIN (Ref # 12048)	12048-0004	1
GUIDE-CHAIN (Ref # 12053)	12053-0002	2
CHAIN,CAM,98XRH2015-70M (Ref # 92057)	92057-0026	1
BOLT,SOCKET,6X30 (Ref # 92150)	92150-1433	4

© 2026 Kawasaki Motors Corp., U.S.A.