2008 Vulcan® 2000

PARTS DIAGRAM

Cylinder/Piston(s)

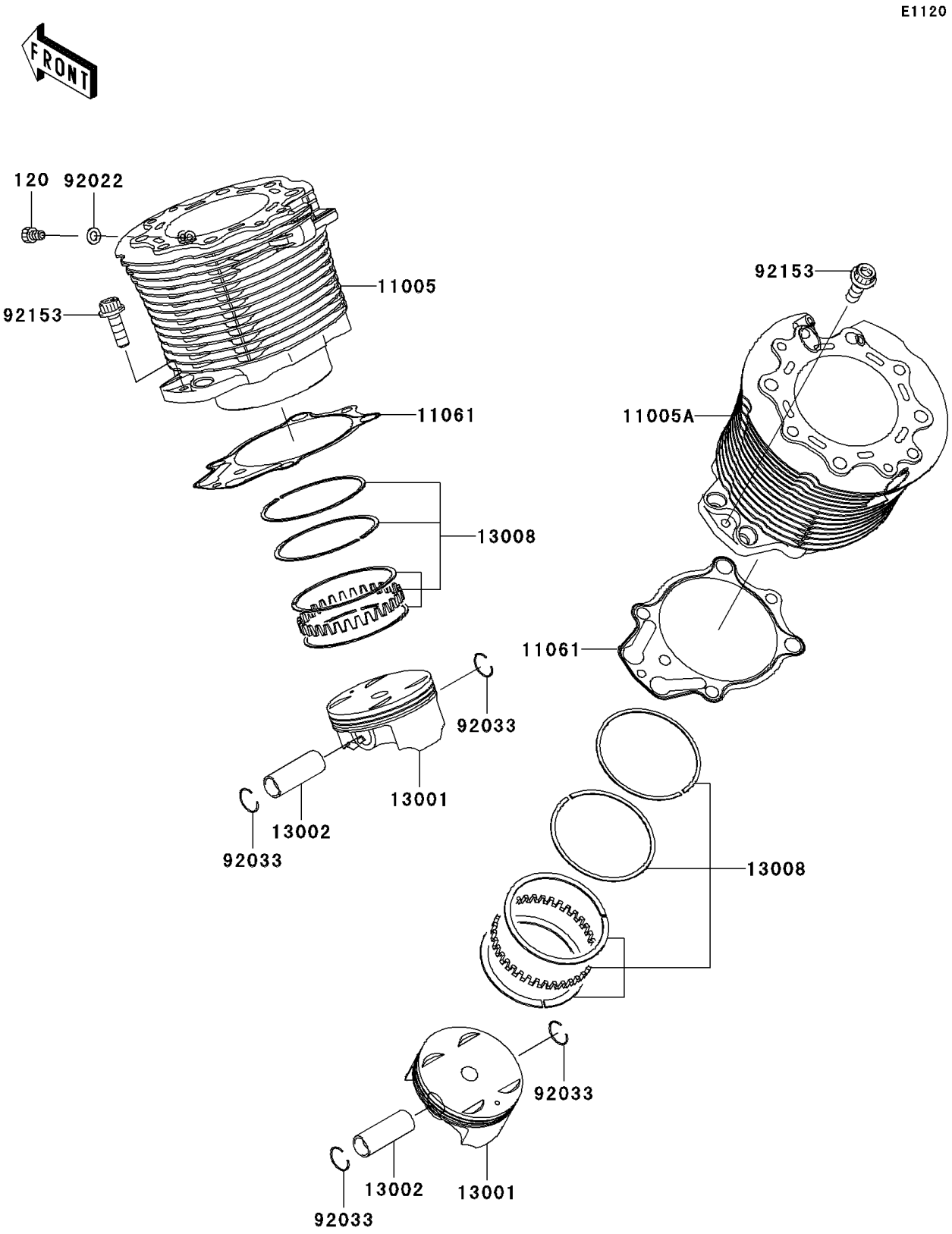

© 2026 Kawasaki Motors Corp., U.S.A.

2008 Vulcan® 2000

PARTS LIST

Cylinder/Piston(s)

ITEM NAME	PART NUMBER	QUANTITY
BOLT-SOCKET,6X10 (Ref # 120)	120R0610	1
CYLINDER-ENGINE,FR (Ref # 11005)	11005-0040	1
CYLINDER-ENGINE,RR (Ref # 11005A)	11005-0041	1
GASKET,CYLINDER BASE (Ref # 11061)	11061-0010	2
PISTON-ENGINE (Ref # 13001)	13001-0003	2
PIN-PISTON (Ref # 13002)	13002-0001	2
RING-SET-PISTON (Ref # 13008)	13008-0001	2
WASHER,6.2X11X1 (Ref # 92022)	92022-304	1
RING-SNAP (Ref # 92033)	92033-3721	4
BOLT,8X25 (Ref # 92153)	92153-0313	2

© 2026 Kawasaki Motors Corp., U.S.A.