2002 Vulcan 1500 Mean Streak

PARTS DIAGRAM

Starter Motor

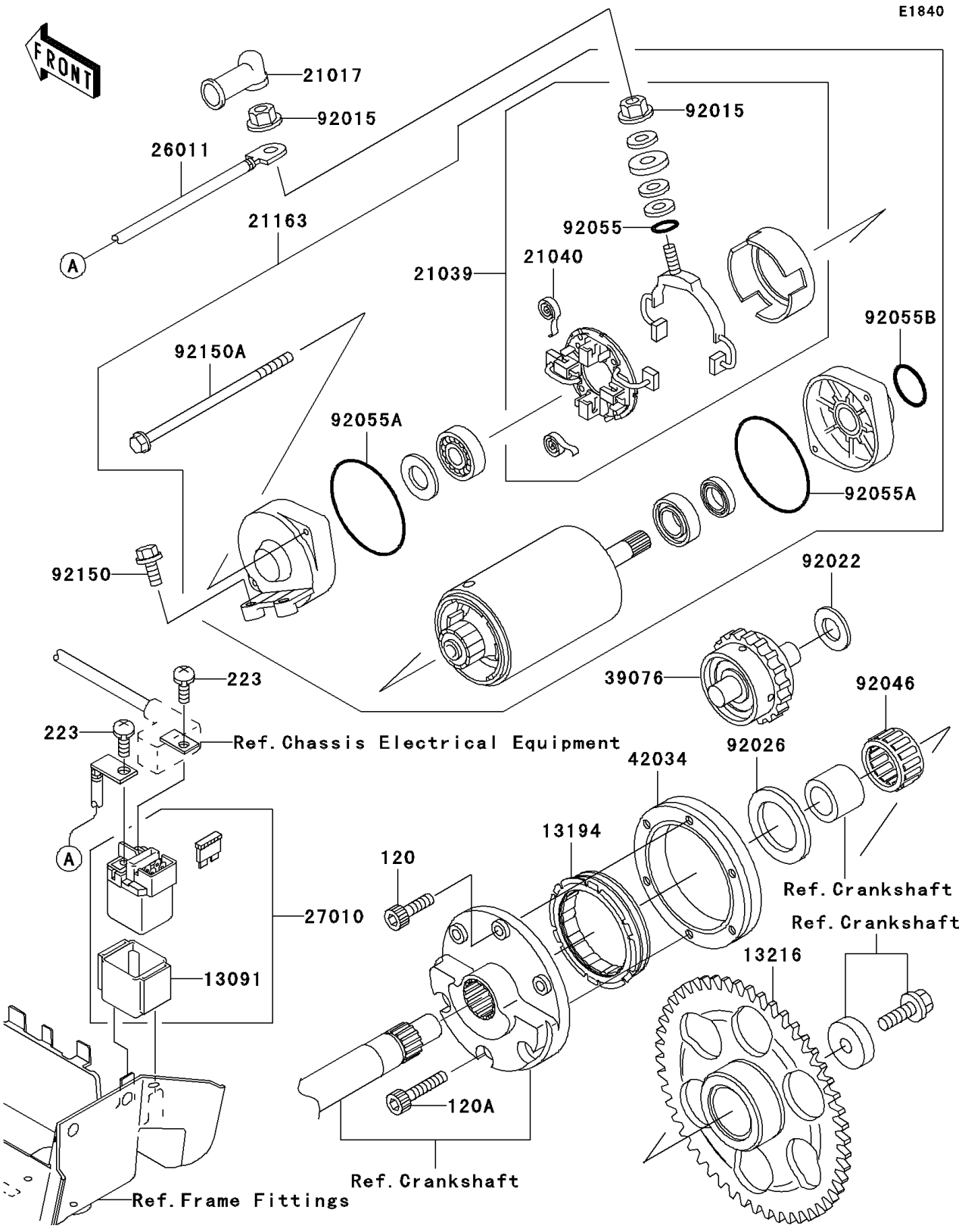

© 2026 Kawasaki Motors Corp., U.S.A.

2002 Vulcan 1500 Mean Streak

PARTS LIST

Starter Motor

ITEM NAME	PART NUMBER	QUANTITY
BOLT-SOCKET,6X20 (Ref # 120)	120S0620	3
BOLT-SOCKET,6X30,BLACK (Ref # 120A)	120S0630	3
SCREW-PAN-WS-CROS (Ref # 223)	223D0510	2
HOLDER,MAGNETIC SWITCH (Ref # 13091)	13091-1884	1
CLUTCH-ONEWAY (Ref # 13194)	13194-1088	1
GEAR-COMP,FREE WHEEL (Ref # 13216)	13216-1115	1
GROMMET,STARTER TERMINAL (Ref # 21017)	21017-017	1
BRUSH,CARBON (Ref # 21039)	21039-1060	1
SPRING-BRUSH (Ref # 21040)	21040-1055	4
STARTER-ELECTRIC (Ref # 21163)	21163-1271	1
WIRE-LEAD (Ref # 26011)	26011-1700	1
SWITCH,MAGNETIC (Ref # 27010)	27010-1327	1
LIMITER,STARTER IDLE GEAR (Ref # 39076)	39076-1057	1
COUPLING (Ref # 42034)	42034-1093	1
NUT,STARTER MOTOR (Ref # 92015)	92015-1476	2
WASHER,12X27.5X1.0 (Ref # 92022)	92022-1852	1
SPACER,31X49.5X1.2 (Ref # 92026)	92026-1490	1
BEARING-NEEDLE,K30X35X20 (Ref # 92046)	92046-1171	1
RING-O,4.5X2.0 (Ref # 92055)	92055-1370	1
RING-O,STARTER MOTOR (Ref # 92055A)	92055-1381	2
RING-O,37MM (Ref # 92055B)	92055-1393	1
BOLT,6X25 (Ref # 92150)	92150-1779	2
BOLT,STARTER MOTOR (Ref # 92150A)	92150-1913	2

© 2026 Kawasaki Motors Corp., U.S.A.