2002 Vulcan 1500 Mean Streak

PARTS DIAGRAM

Crankcase Bolt Pattern

E1412

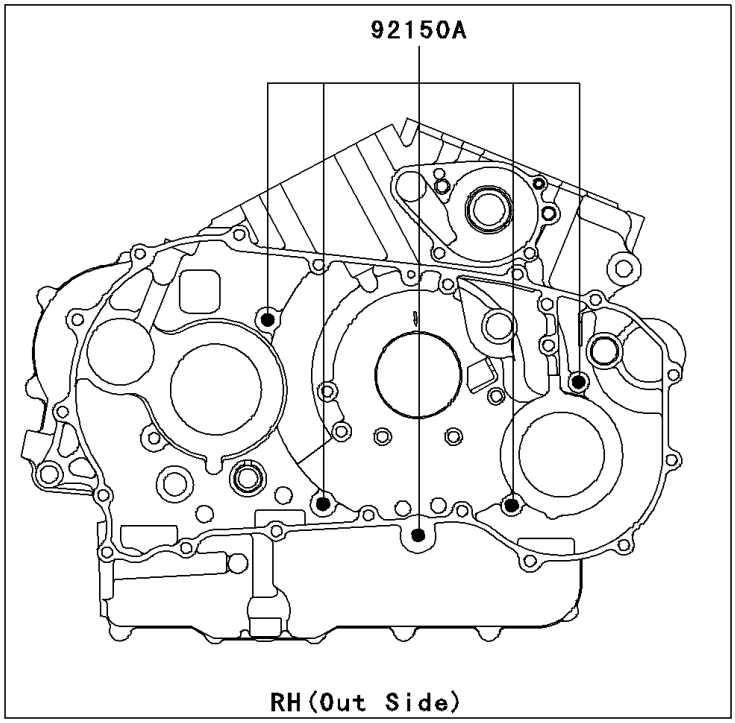

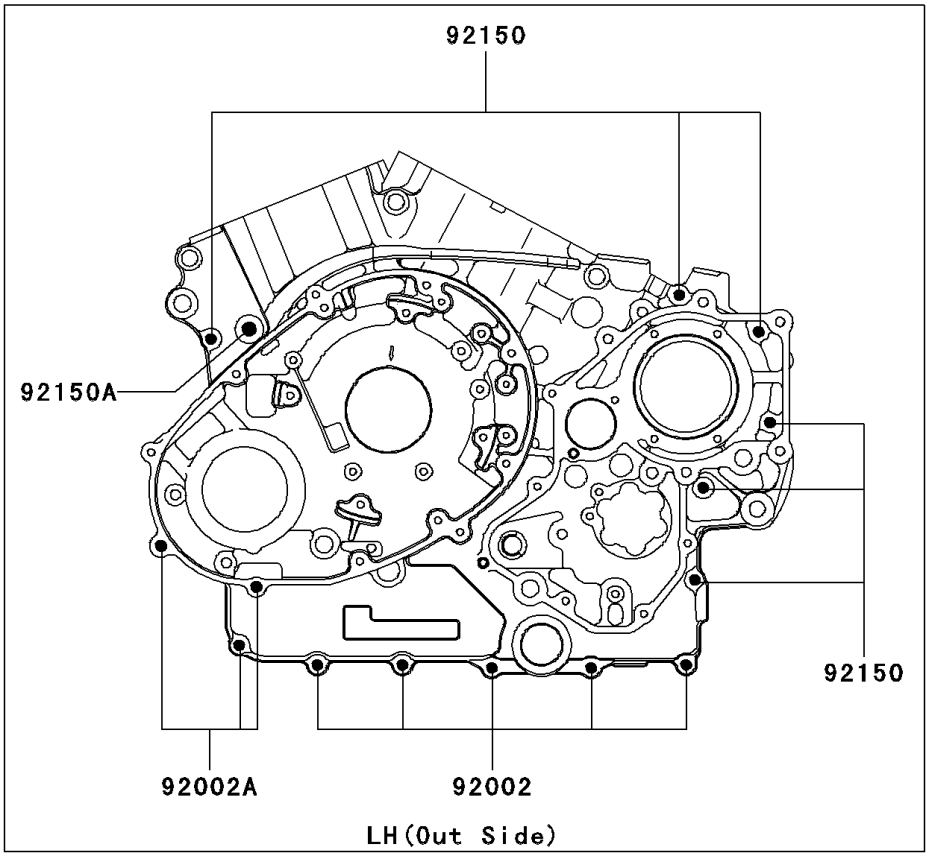

© 2026 Kawasaki Motors Corp., U.S.A.

2002 Vulcan 1500 Mean Streak

Kawasaki
Let the Good Times Roll®

PARTS LIST

Crankcase Bolt Pattern

ITEM NAME	PART NUMBER	QUANTITY
BOLT,6X40 (Ref # 92002)	92002-1566	5
BOLT,6X80 (Ref # 92002A)	92002-1568	3
BOLT,6X70 (Ref # 92150)	92150-1995	6
BOLT,8X90 (Ref # 92150A)	92150-1996	6

© 2026 Kawasaki Motors Corp., U.S.A.