2003 Vulcan 1500 Mean Streak

PARTS DIAGRAM

Cylinder Head

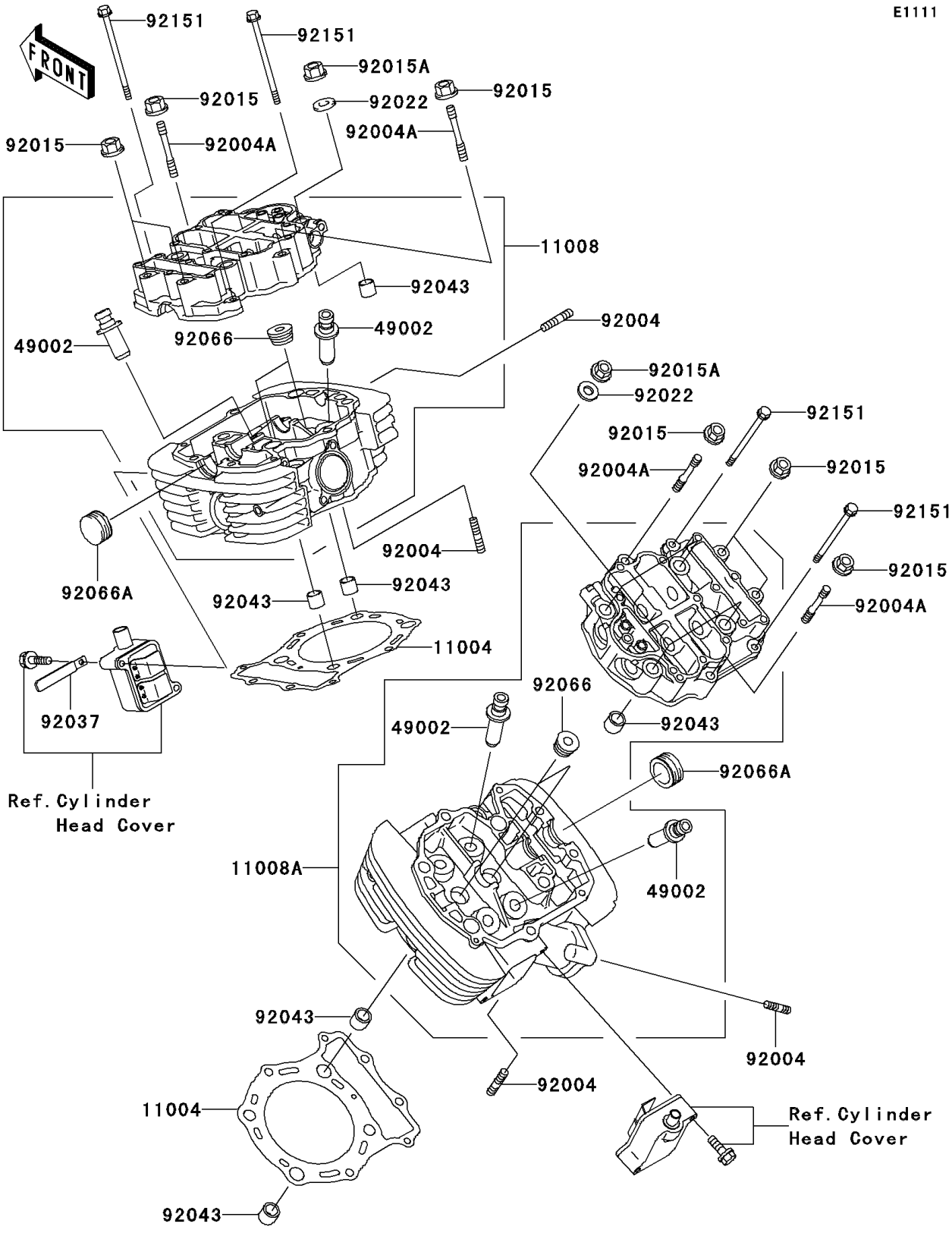

© 2026 Kawasaki Motors Corp., U.S.A.

2003 Vulcan 1500 Mean Streak

PARTS LIST

Cylinder Head

ITEM NAME	PART NUMBER	QUANTITY
GASKET-HEAD (Ref # 11004)	11004-1334	2
HEAD-COMP-CYLINDER,FR (Ref # 11008)	11008-1407	1
HEAD-COMP-CYLINDER,RR (Ref # 11008A)	11008-1408	1
GUIDE-VALVE (Ref # 49002)	49002-1088	AR
STUD,8X25 (Ref # 92004)	92004-1214	8
STUD,8X46.5 (Ref # 92004A)	92004-1224	4
NUT,FLANGED,8MM (Ref # 92015)	92015-1406	8
NUT,12MM (Ref # 92015A)	92015-1991	8
WASHER,12.3X25X3.2 (Ref # 92022)	92022-1862	8
CLAMP,L=45 (Ref # 92037)	92037-1539	1
PIN,13X16X14 (Ref # 92043)	92043-1608	8
PLUG,PT1/2X12.5 (Ref # 92066)	92066-1253	4
PLUG (Ref # 92066A)	92066-1442	2
BOLT,6X115 (Ref # 92151)	92151-1058	4

© 2026 Kawasaki Motors Corp., U.S.A.