2019 KX™450

PARTS DIAGRAM

Ignition System

E1830

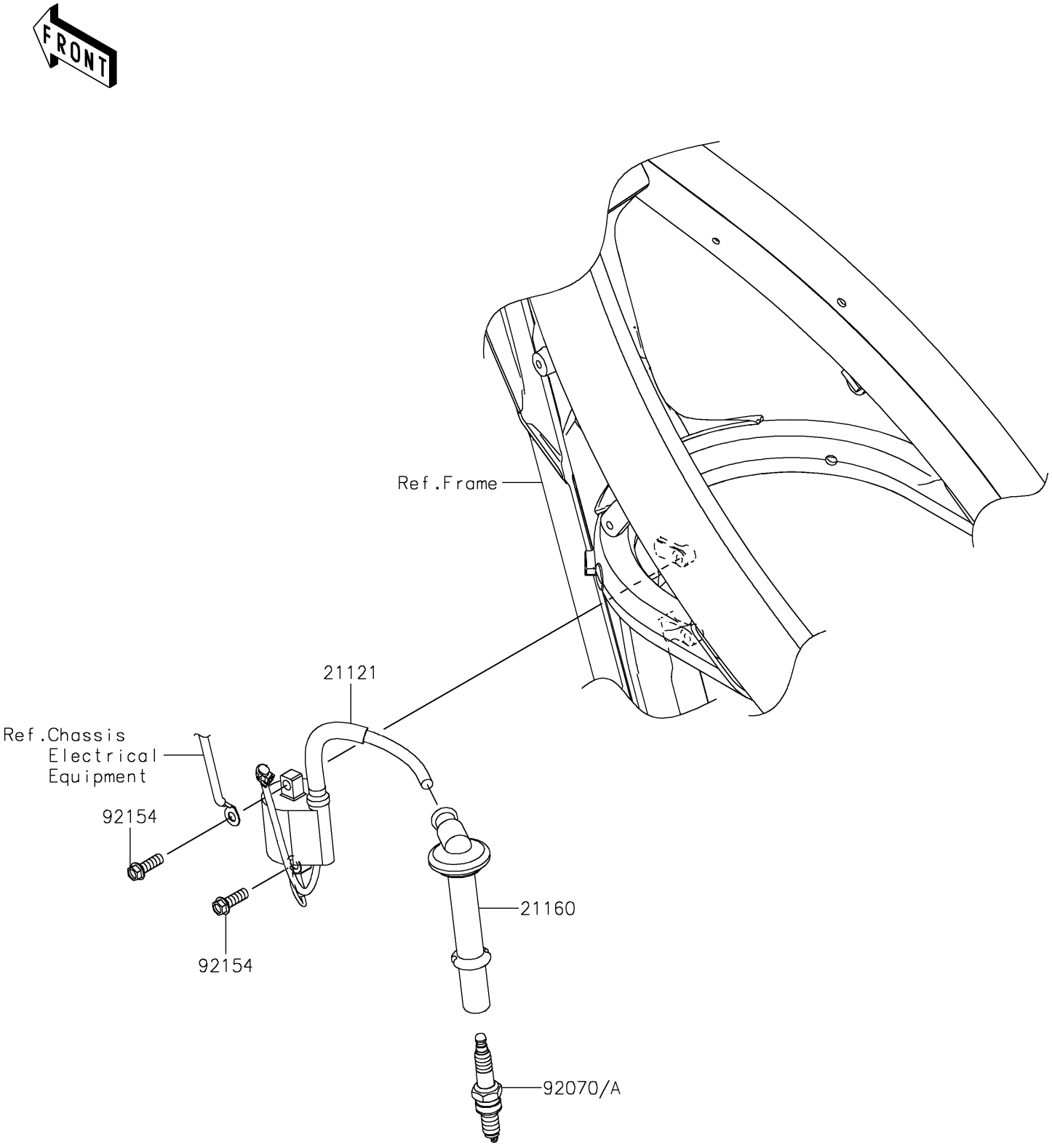

© 2026 Kawasaki Motors Corp., U.S.A.

2019 KX™450

PARTS LIST

Ignition System

ITEM NAME	PART NUMBER	QUANTITY
COIL-IGNITION (Ref # 21121)	21121-0723	1
CAP-ASSY-PLUG (Ref # 21160)	21160-0024	1
PLUG-SPARK,CPR8EB-9(NGK) (Ref # 92070)	92070-0020	1
PLUG-SPARK,CPR9EB-9(NGK) (Ref # 92070A)	92070-0021	1
BOLT,FLANGED,6X18 (Ref # 92154)	92154-2976	2

© 2026 Kawasaki Motors Corp., U.S.A.