2012 JET SKI® STX®-15F

PARTS DIAGRAM

Cylinder/Piston(s)

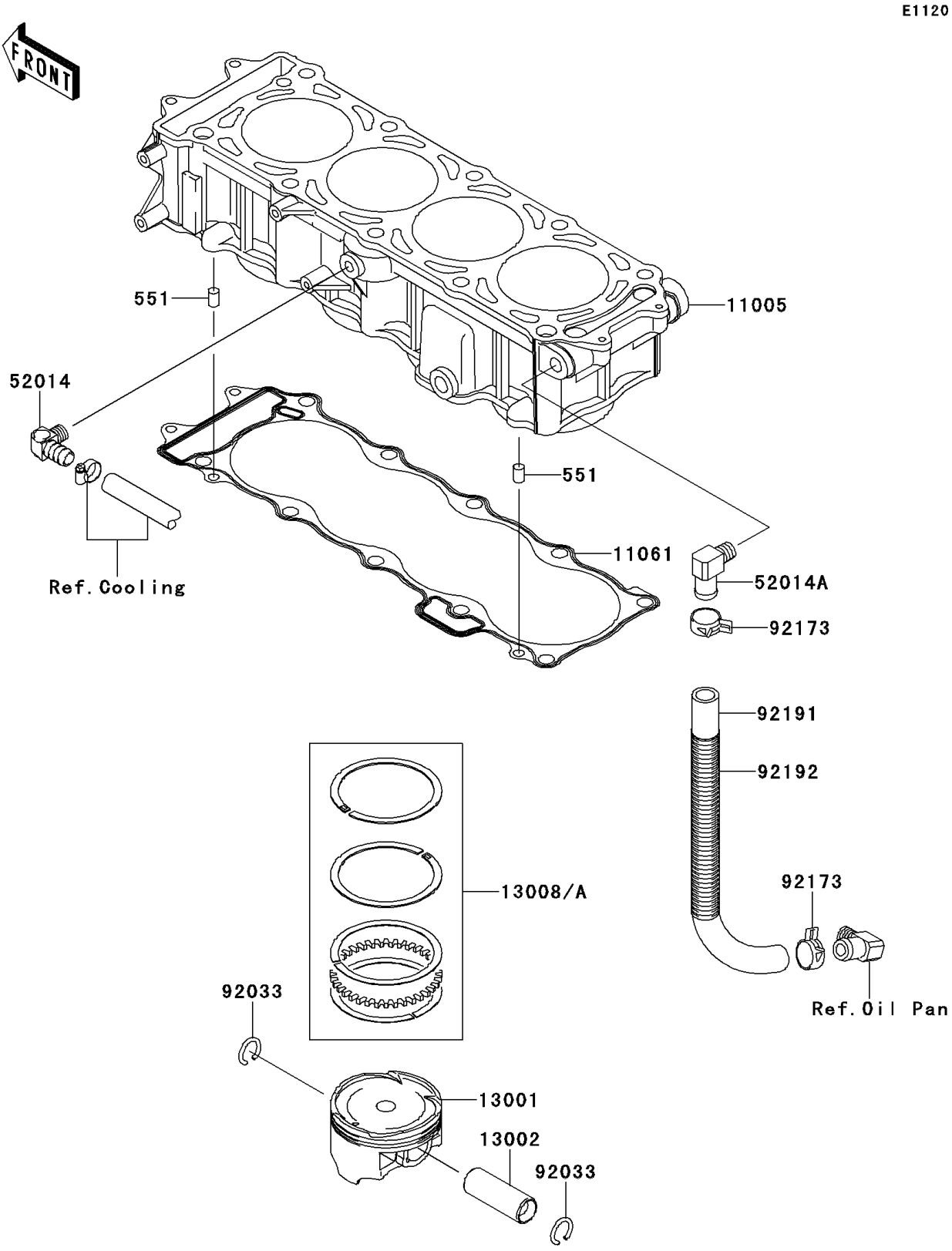

© 2026 Kawasaki Motors Corp., U.S.A.

2012 JET SKI® STX®-15F

PARTS LIST

Cylinder/Piston(s)

ITEM NAME	PART NUMBER	QUANTITY
CYLINDER-ENGINE (Ref # 11005)	11005-3768	1
GASKET,CYLINDER BASE (Ref # 11061)	11061-3708	1
PISTON-ENGINE (Ref # 13001)	13001-3737	4
PIN-PISTON (Ref # 13002)	13002-3709	4
RING-SET-PISTON (Ref # 13008A)	13008-1196	4
ELBOW (Ref # 52014)	52014-3711	1
ELBOW (Ref # 52014A)	52014-3717	1
RING-SNAP (Ref # 92033)	92033-1188	8
CLAMP (Ref # 92173)	92173-1039	2
TUBE,BREATHER (Ref # 92191)	92191-3983	1
TUBE,CORRUGATED,L=265 (Ref # 92192)	92192-1083	1
PIN-DOWEL (Ref # 551)	551R0812	2

© 2026 Kawasaki Motors Corp., U.S.A.