2011 JET SKI® Ultra® LX

PARTS DIAGRAM

Handle Pole

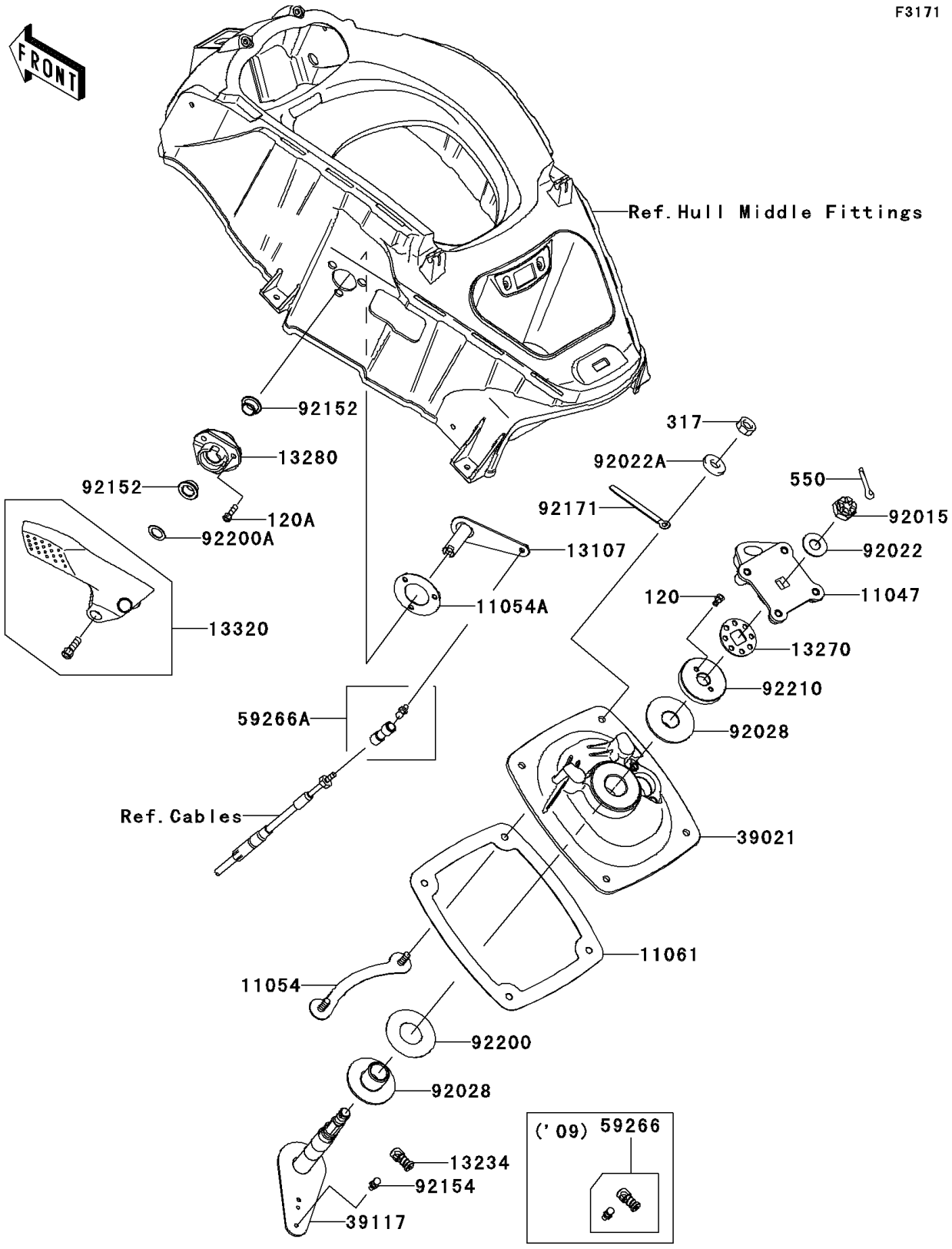

© 2026 Kawasaki Motors Corp., U.S.A.

2011 JET SKI® Ultra® LX

PARTS LIST

Handle Pole

ITEM NAME	PART NUMBER	QUANTITY
BRACKET,HANDLE HOLDER (Ref # 11047)	11047-3759	1
BRACKET,HANDLE POLE BRACKET (Ref # 11054)	11054-3701	2
BRACKET (Ref # 11054A)	11054-3712	1
GASKET,HANDLE POLE BRACKET (Ref # 11061)	11061-3739	1
SHAFT (Ref # 13107)	13107-3799	1
SHAFT-COMP (Ref # 13234)	13234-3713	1
PLATE,STEERING NUT (Ref # 13270)	13270-3808	1
HOLDER (Ref # 13280)	13280-3752	1
LEVER-ASSY,REVERSE (Ref # 13320)	13320-3719	1
BRACKET-HANDLE POLE (Ref # 39021)	39021-3716	1
SHAFT-STRG (Ref # 39117)	39117-3715	1
JOINT-BALL (Ref # 59266A)	59266-3710	1
NUT,CASTLE,14MM (Ref # 92015)	92015-3805	1
WASHER,15X34X2.0 (Ref # 92022)	92022-3738	1
WASHER,8.4X23X2.5 (Ref # 92022A)	92022-3744	4
BUSHING,STEERING (Ref # 92028)	92028-3748	2
COLLAR (Ref # 92152)	92152-3748	2
BOLT,BALL,6MM (Ref # 92154)	92154-3710	1
CLAMP,L=150 (Ref # 92171)	92171-3717	1
WASHER,32.5X70X2 (Ref # 92200)	92200-3718	1
WASHER,16.5X25X1 (Ref # 92200A)	92200-3800	1
NUT,STEERING SHAFT,22MM (Ref # 92210)	92210-3776	1
BOLT-SOCKET,5X10 (Ref # 120)	120R0510	2
BOLT-SOCKET,6X20 (Ref # 120A)	120R0620	3
NUT-HEX-SMALL (Ref # 317)	317R0800	4
PIN-COTTER,3X35 (Ref # 550)	550S3035	1

© 2026 Kawasaki Motors Corp., U.S.A.