2011 JET SKI® Ultra® LX

PARTS DIAGRAM

Hull Rear Fittings

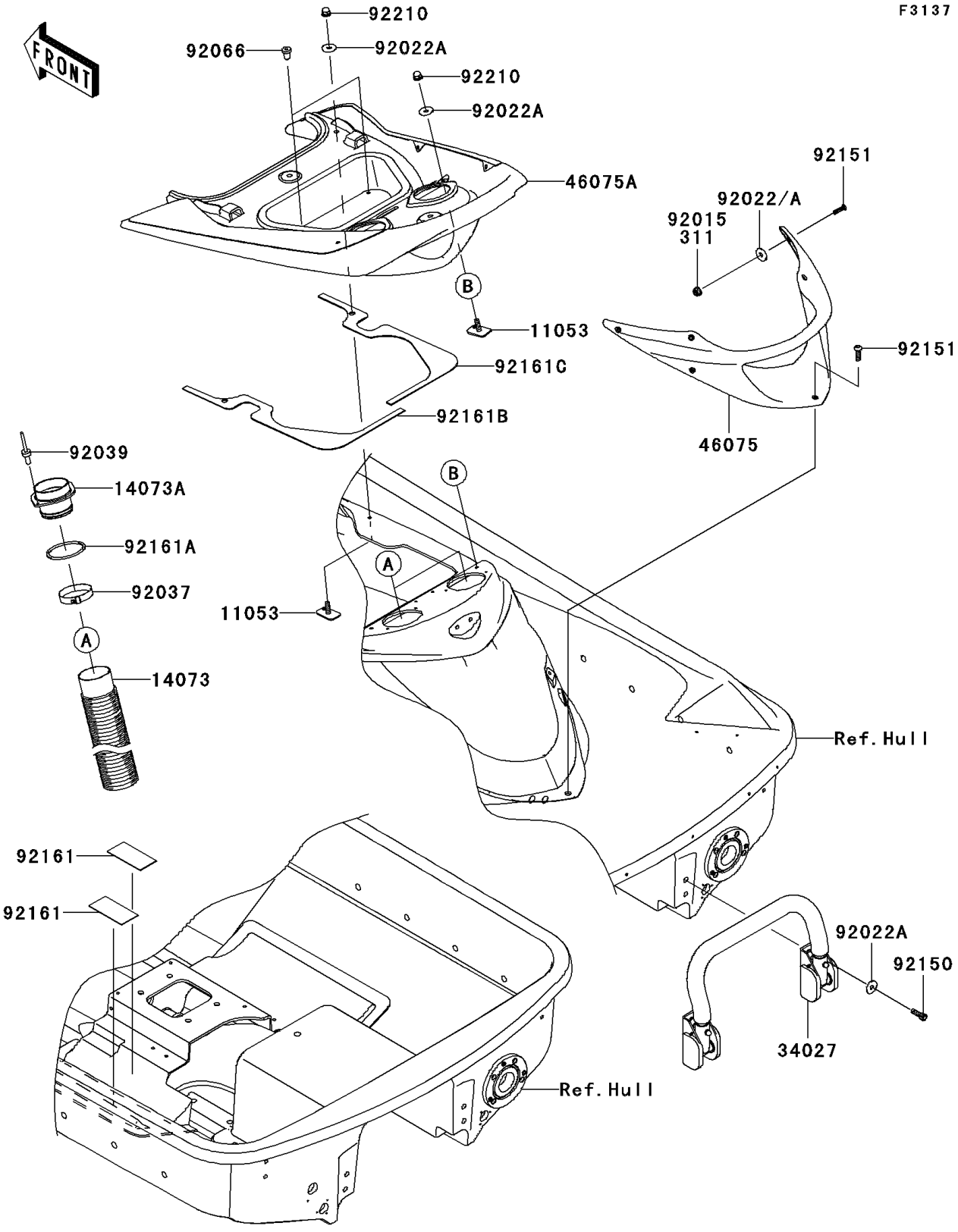

© 2026 Kawasaki Motors Corp., U.S.A.

2011 JET SKI® Ultra® LX

PARTS LIST

Hull Rear Fittings

ITEM NAME	PART NUMBER	QUANTITY
BRACKET (Ref # 11053)	11053-3776	4
DUCT,L=800 (Ref # 14073)	14073-3804	2
DUCT (Ref # 14073A)	14073-3805	2
STEP-ASSY (Ref # 34027)	34027-3709	1
GRIP,HANDLE (Ref # 46075)	46075-3765	1
GRIP,RR,UPP (Ref # 46075A)	46075-3766	1
WASHER,6.5X20X1.6 (Ref # 92022)	92022-1557	6
WASHER,6.5X20X1.5 (Ref # 92022A)	92022-3710	8
CLAMP (Ref # 92037)	92037-3738	2
RIVET (Ref # 92039)	92039-3775	4
PLUG (Ref # 92066)	92066-3773	2
BOLT,SOCKET,6X18 (Ref # 92150)	92150-3775	4
BOLT,SOCKET,6X20 (Ref # 92151)	92151-1749	7
DAMPER (Ref # 92161)	92161-3728	2
DAMPER (Ref # 92161A)	92161-3769	2
DAMPER (Ref # 92161B)	92161-3781	1
DAMPER (Ref # 92161C)	92161-3782	1
NUT,CAP,6MM (Ref # 92210)	92210-3785	4
NUT-HEX,6MM (Ref # 311)	311AA0600	6

© 2026 Kawasaki Motors Corp., U.S.A.