2011 JET SKI® Ultra® LX

PARTS DIAGRAM

Oil Pan

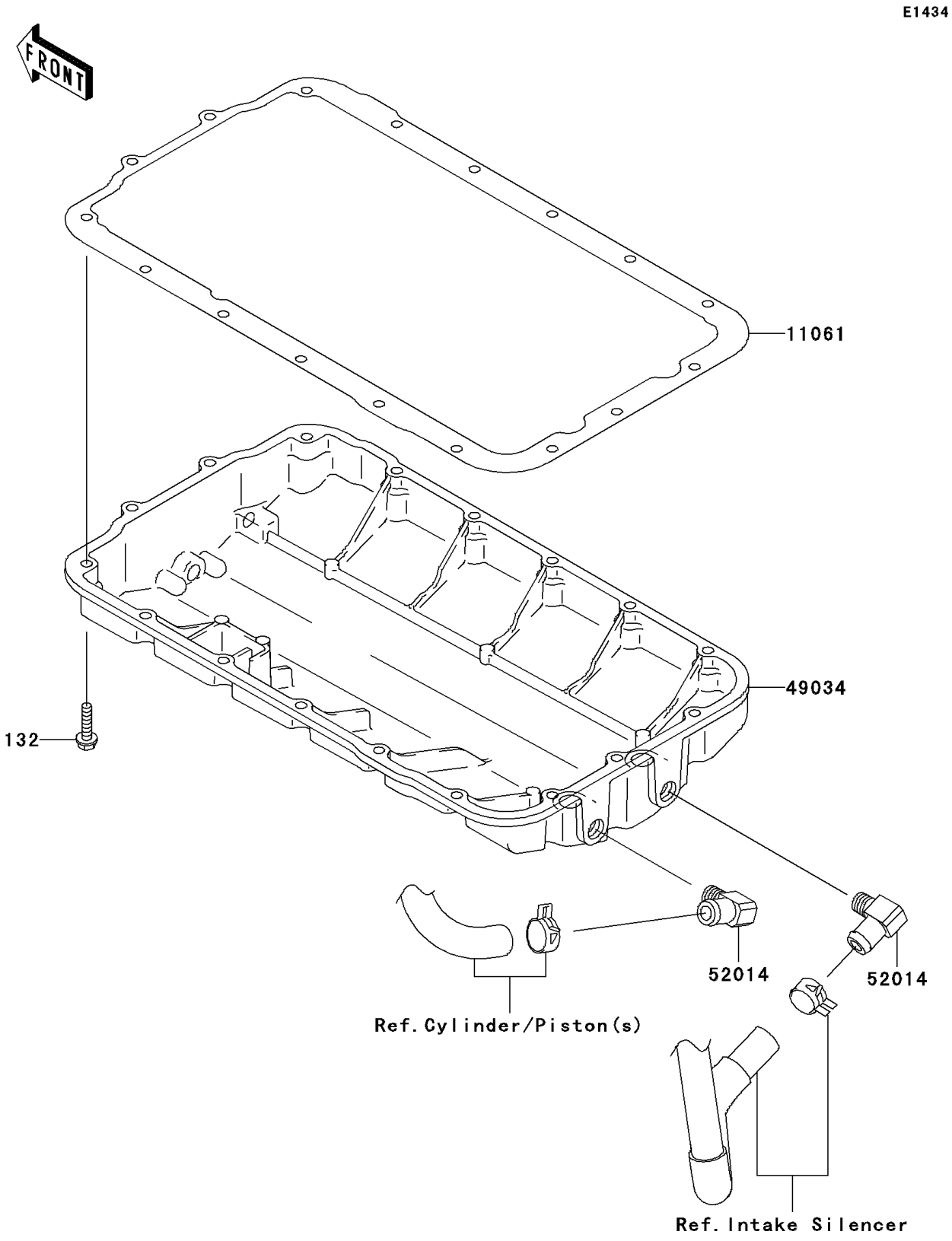

© 2026 Kawasaki Motors Corp., U.S.A.

2011 JET SKI® Ultra® LX

PARTS LIST

Oil Pan

ITEM NAME	PART NUMBER	QUANTITY
GASKET,OIL PAN (Ref # 11061)	11061-3710	1
PAN-OIL (Ref # 49034)	49034-3702	1
ELBOW (Ref # 52014)	52014-3717	2
BOLT-FLANGED-SMALL,6X25 (Ref # 132)	132BD0625	17

© 2026 Kawasaki Motors Corp., U.S.A.