2011 JET SKI® Ultra® LX

PARTS DIAGRAM

Crankcase

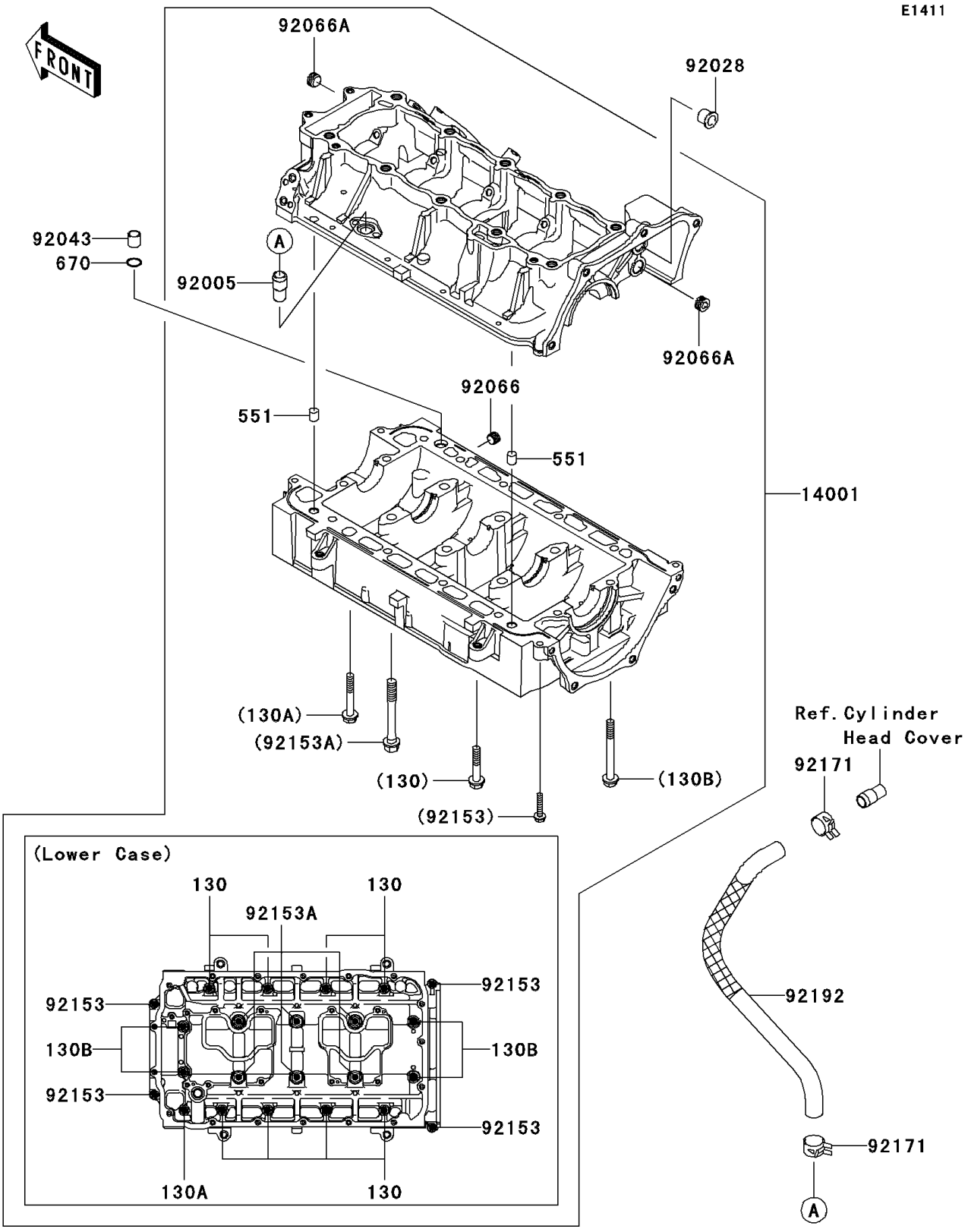

© 2026 Kawasaki Motors Corp., U.S.A.

2011 JET SKI® Ultra® LX

PARTS LIST

Crankcase

ITEM NAME	PART NUMBER	QUANTITY
SET-CRANKCASE (Ref # 14001)	14001-3747	1
FITTING (Ref # 92005)	92005-3741	1
BUSHING (Ref # 92028)	92028-3718	1
PIN,11.5X14X14 (Ref # 92043)	92043-1279	1
PLUG (Ref # 92066)	92066-3778	1
PLUG (Ref # 92066A)	92066-3782	2
BOLT,6X30 (Ref # 92153)	92153-3707	4
BOLT,10X85 (Ref # 92153A)	92153-3711	6
CLAMP,TUBE (Ref # 92171)	92171-3710	2
TUBE,HEAD-CRANKCASE (Ref # 92192)	92192-3829	1
BOLT-FLANGED,8X45 (Ref # 130)	130CD0845	8
BOLT-FLANGED,8X55 (Ref # 130A)	130CD0855	1
BOLT-FLANGED,8X85 (Ref # 130B)	130CD0885	4
PIN-DOWEL (Ref # 551)	551R1012	2
O RING,14MM (Ref # 670)	670D2014	1

© 2026 Kawasaki Motors Corp., U.S.A.