2011 JET SKI® Ultra® LX

PARTS DIAGRAM

Intake Silencer

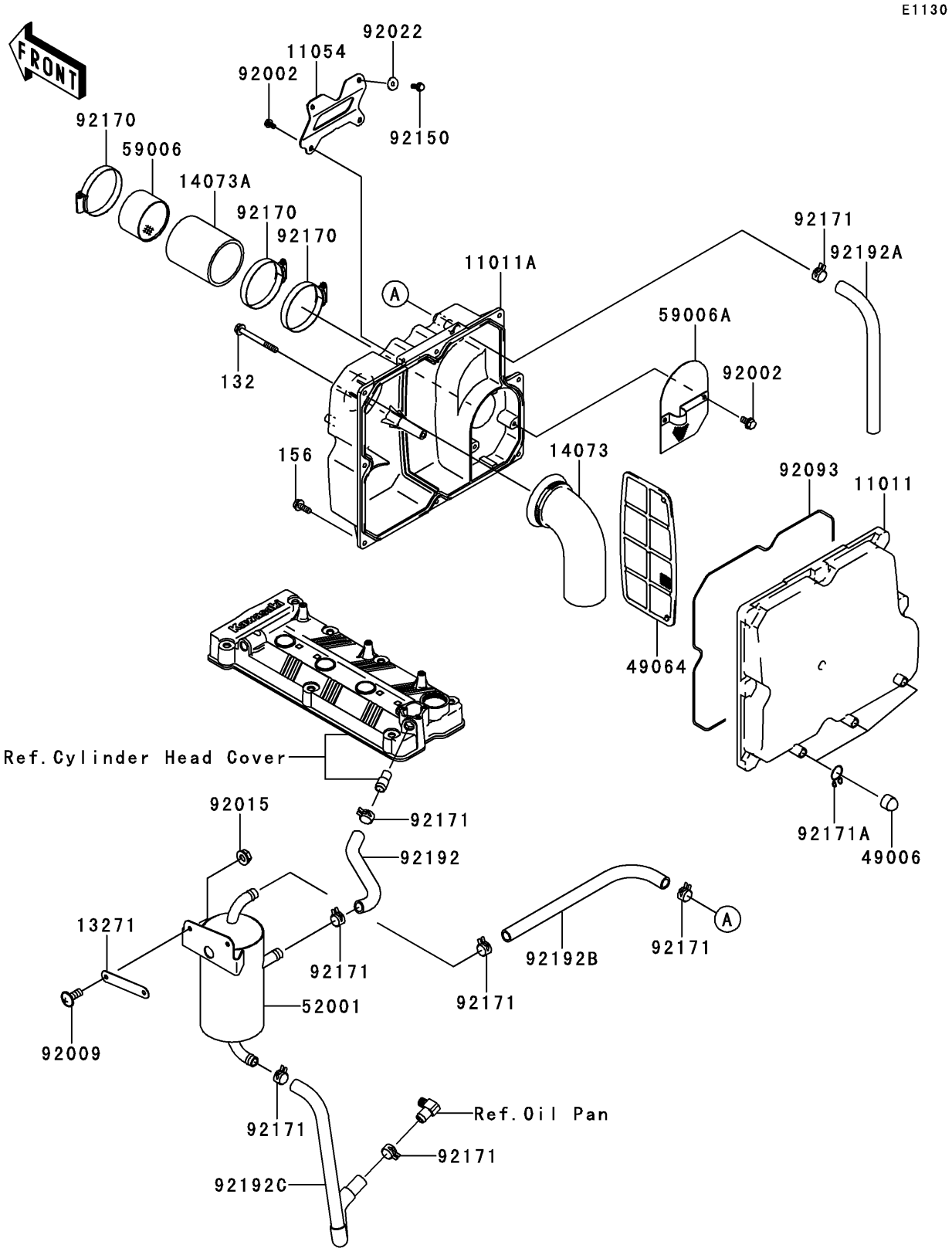

© 2026 Kawasaki Motors Corp., U.S.A.

2011 JET SKI® Ultra® LX

PARTS LIST

Intake Silencer

ITEM NAME	PART NUMBER	QUANTITY
CASE-AIR FILTER,RR (Ref # 11011)	11011-3704	1
CASE-AIR FILTER (Ref # 11011A)	11011-3706	1
BRACKET,AIR BOX (Ref # 11054)	11054-3744	1
PLATE (Ref # 13271)	13271-3880	1
DUCT,AIR INLET (Ref # 14073)	14073-3794	1
DUCT,AIR FILTER-THOROTTLE (Ref # 14073A)	14073-3795	1
BOOT,DRAIN (Ref # 49006)	49006-3718	3
FILTER-AIR (Ref # 49064)	49064-3702	1
TANK-OIL (Ref # 52001)	52001-3738	1
ARRESTER-FLAME (Ref # 59006)	59006-0019	1
ARRESTER-FLAME (Ref # 59006A)	59006-3720	1
BOLT,6X12 (Ref # 92002)	92002-3763	4
SCREW,6X20 (Ref # 92009)	92009-3870	2
NUT,6MM (Ref # 92015)	92015-3767	2
WASHER,6.5X20X1.5 (Ref # 92022)	92022-3710	2
SEAL (Ref # 92093)	92093-3766	1
BOLT,6X18 (Ref # 92150)	92150-3729	2
CLAMP (Ref # 92170)	92170-3764	3
CLAMP,TUBE (Ref # 92171)	92171-3710	7
CLAMP,BOOT (Ref # 92171A)	92171-3711	3
TUBE,HEAD-SEPARATOR (Ref # 92192)	92192-3719	1
TUBE,BLOWBY (Ref # 92192A)	92192-3725	1
TUBE,OIL TANK-A/C (Ref # 92192B)	92192-3795	1
TUBE,OIL TANK-OIL PAN (Ref # 92192C)	92192-3808	1
BOLT-FLANGED-SMALL,6X60 (Ref # 132)	132BD0660	1
BOLT-WP,6X16 (Ref # 156)	156R0616	8

© 2026 Kawasaki Motors Corp., U.S.A.