2010 Jet Ski® Ultra® 260LX

PARTS DIAGRAM

Starter Motor

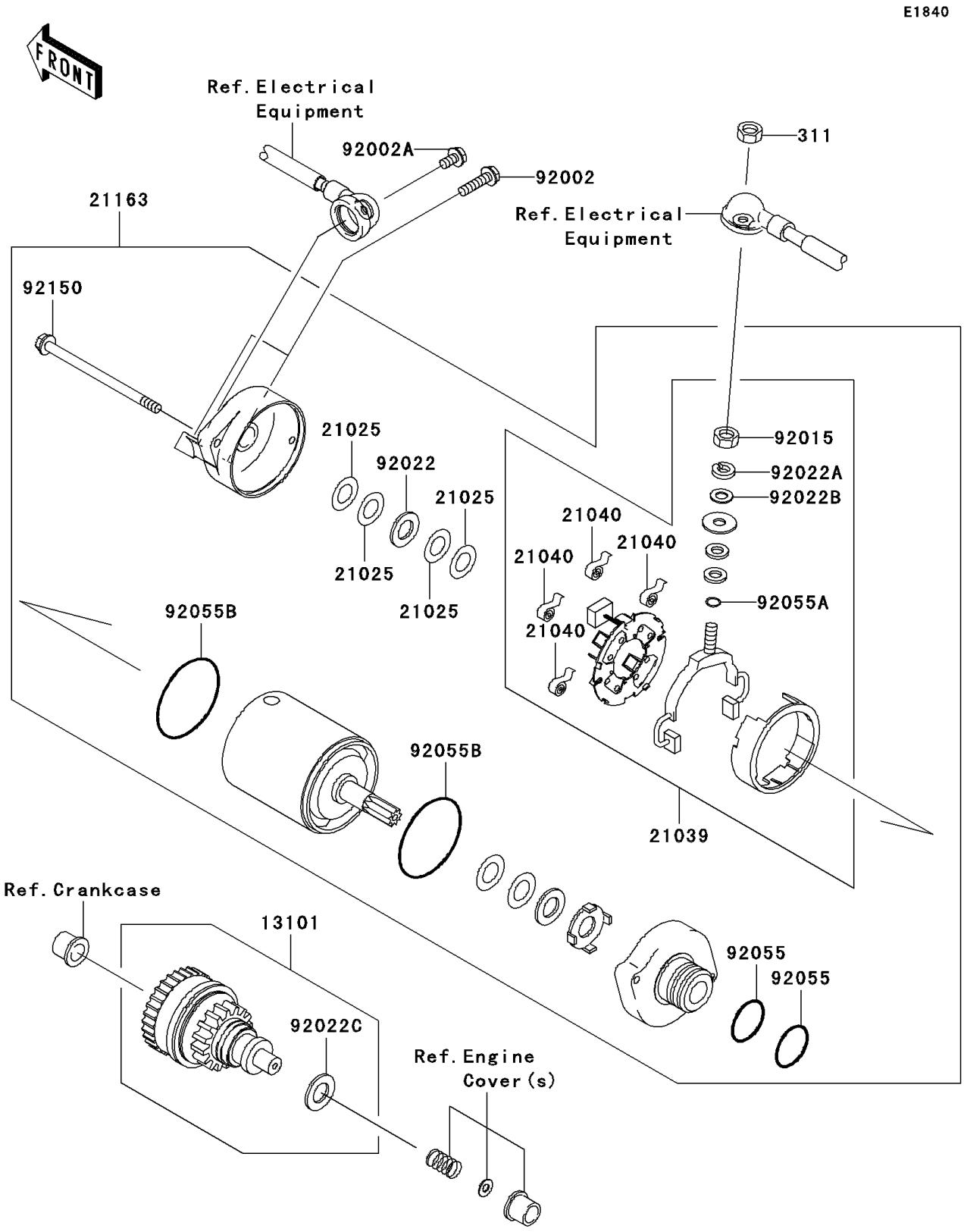

© 2026 Kawasaki Motors Corp., U.S.A.

2010 Jet Ski® Ultra® 260LX

PARTS LIST

Starter Motor

ITEM NAME	PART NUMBER	QUANTITY
GEAR-ASSY (Ref # 13101)	13101-3710	1
WASHER,9.1X18X0.2 (Ref # 21025)	21025-011	AR
BRUSH,CARBON (Ref # 21039)	21039-3703	1
SPRING-BRUSH (Ref # 21040)	21040-1055	4
STARTER-ELECTRIC (Ref # 21163)	21163-3721	1
BOLT,6X25 (Ref # 92002)	92002-3714	2
BOLT,6X12 (Ref # 92002A)	92002-3763	1
NUT,6MM (Ref # 92015)	92015-3710	1
WASHER,9.1X18X0.8 (Ref # 92022)	92022-1132	1
WASHER,6MM (Ref # 92022A)	92022-3711	1
WASHER,6MM (Ref # 92022B)	92022-3713	1
WASHER,12X24X1.0 (Ref # 92022C)	92022-3731	1
RING-O (Ref # 92055)	92055-1276	2
RING-O,4.5X2.0 (Ref # 92055A)	92055-1370	1
RING-O,STARTER MOTOR (Ref # 92055B)	92055-1381	2
BOLT (Ref # 92150)	92150-3772	2
NUT-HEX,6MM (Ref # 311)	311R0600	1

© 2026 Kawasaki Motors Corp., U.S.A.