2010 Jet Ski® Ultra® 260LX

PARTS DIAGRAM

Oil Pan

E1434

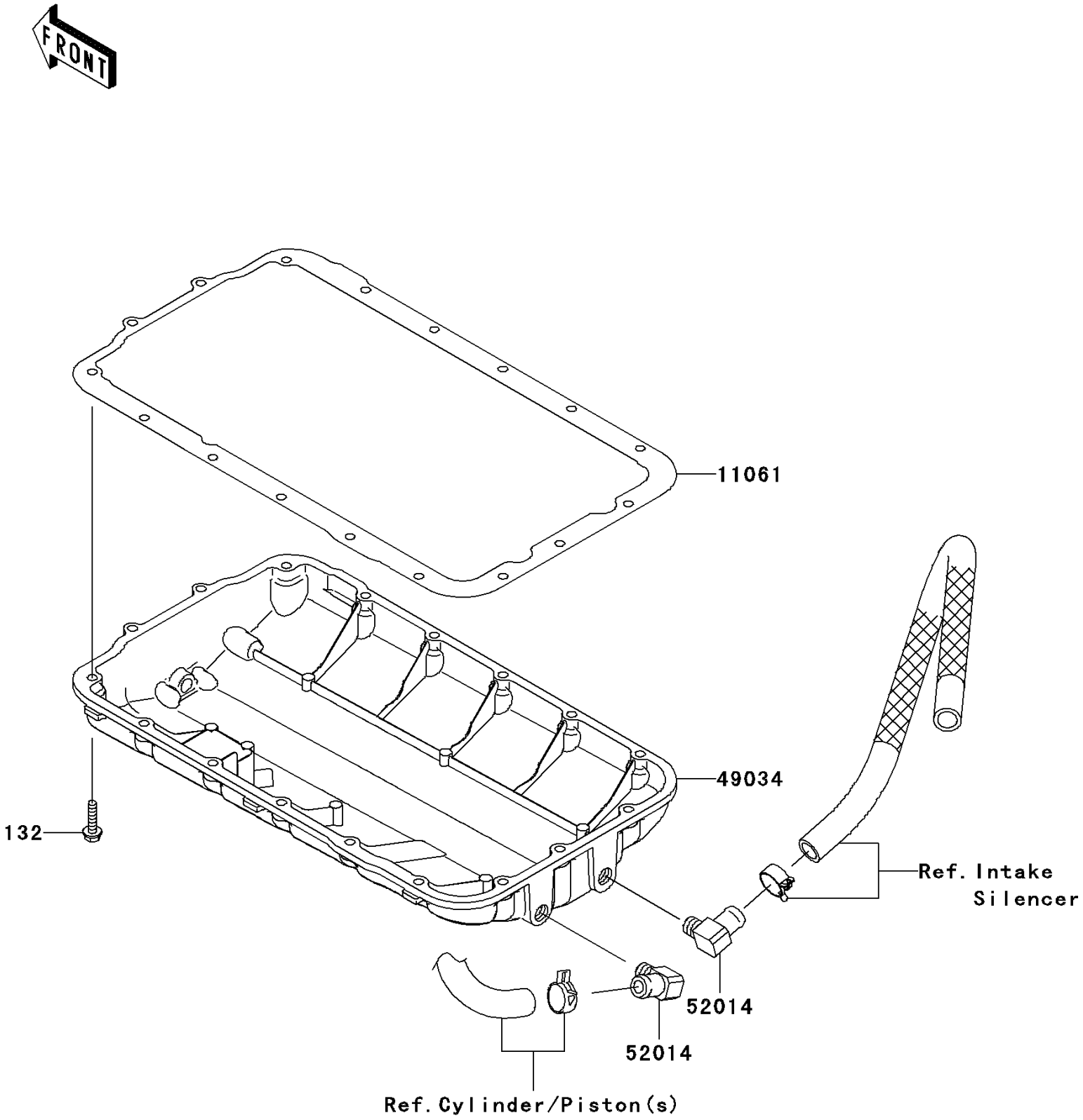

© 2026 Kawasaki Motors Corp., U.S.A.

2010 Jet Ski® Ultra® 260LX

Kawasaki
Let the Good Times Roll®

PARTS LIST

Oil Pan

ITEM NAME	PART NUMBER	QUANTITY
GASKET,OIL PAN (Ref # 11061)	11061-3710	1
PAN-OIL (Ref # 49034)	49034-3702	1
ELBOW (Ref # 52014)	52014-3717	2
BOLT-FLANGED-SMALL,6X25 (Ref # 132)	132BD0625	17

© 2026 Kawasaki Motors Corp., U.S.A.