2009 Jet Ski® STX

PARTS DIAGRAM

Engine Cover(s)

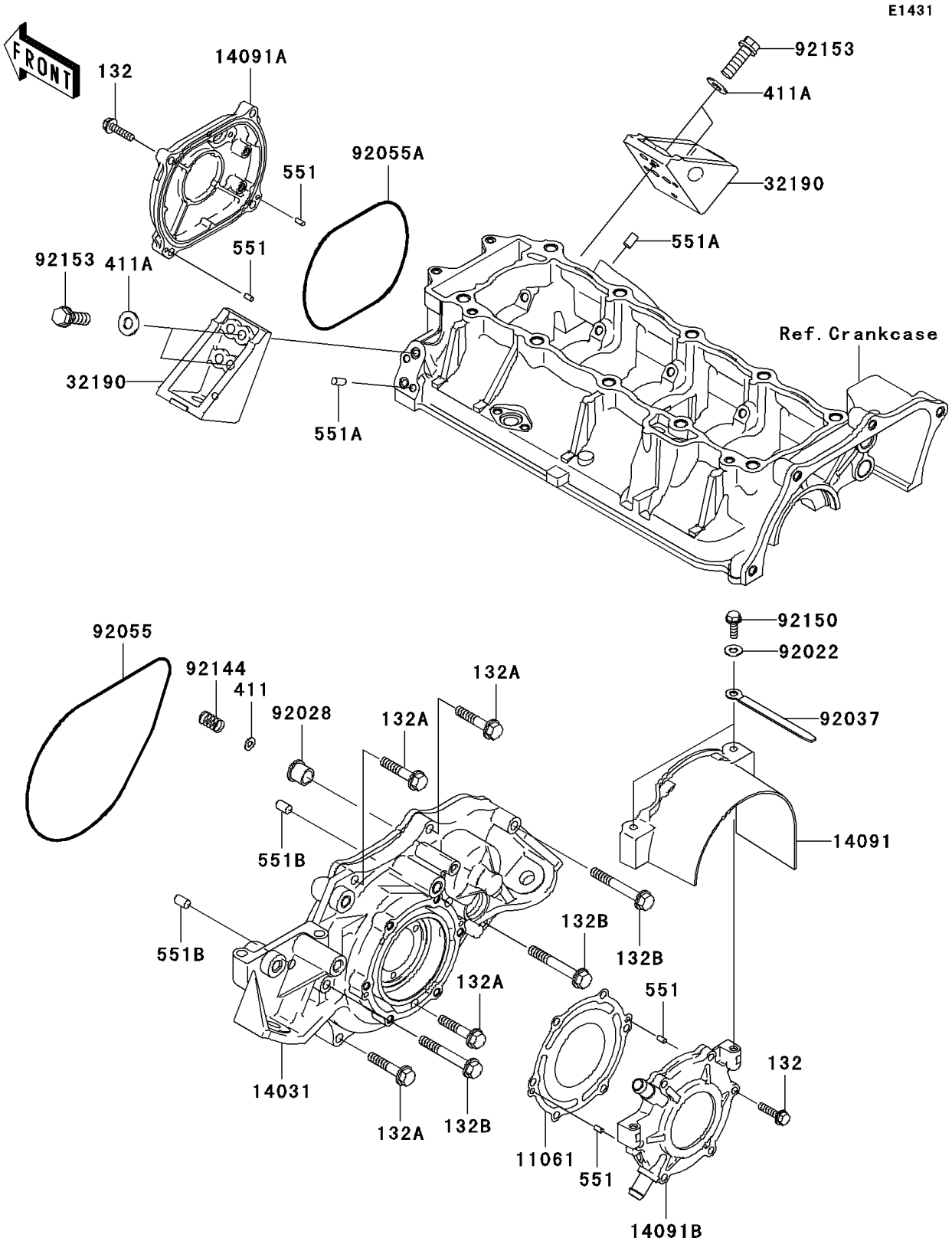

© 2026 Kawasaki Motors Corp., U.S.A.

2009 Jet Ski® STX

PARTS LIST

Engine Cover(s)

ITEM NAME	PART NUMBER	QUANTITY
GASKET,OUTPUT COVER (Ref # 11061)	11061-3709	1
COVER-GENERATOR (Ref # 14031)	14031-3737	1
COVER,COUPLING (Ref # 14091)	14091-3749	1
COVER,PULS (Ref # 14091A)	14091-3763	1
COVER,OUTPUT (Ref # 14091B)	14091-3776	1
BRACKET-ENGINE (Ref # 32190)	32190-3703	2
WASHER,6.5X20X1.5 (Ref # 92022)	92022-3710	2
BUSHING (Ref # 92028)	92028-3718	1
CLAMP,L=100 (Ref # 92037)	92037-3736	2
RING-O,196X3 (Ref # 92055)	92055-3761	1
RING-O,120X3 (Ref # 92055A)	92055-3762	1
SPRING (Ref # 92144)	92144-3728	1
BOLT,6X18 (Ref # 92150)	92150-3729	2
BOLT,FLANGED,8X30 (Ref # 92153)	92153-3722	4
BOLT-FLANGED-SMALL,6X25 (Ref # 132)	132BD0625	10
BOLT-FLANGED-SMALL,8X40 (Ref # 132A)	132BD0840	4
BOLT-FLANGED-SMALL,8X60 (Ref # 132B)	132BD0860	3
WASHER-PLAIN,5MM (Ref # 411)	411S0500	1
WASHER-PLAIN,8MM (Ref # 411A)	411S0800	4
PIN-DOWEL (Ref # 551)	551R0408	4
PIN-DOWEL (Ref # 551A)	551R0612	4
PIN-DOWEL (Ref # 551B)	551R0812	2

© 2026 Kawasaki Motors Corp., U.S.A.