2009 Jet Ski® STX-15F

PARTS DIAGRAM

Labels

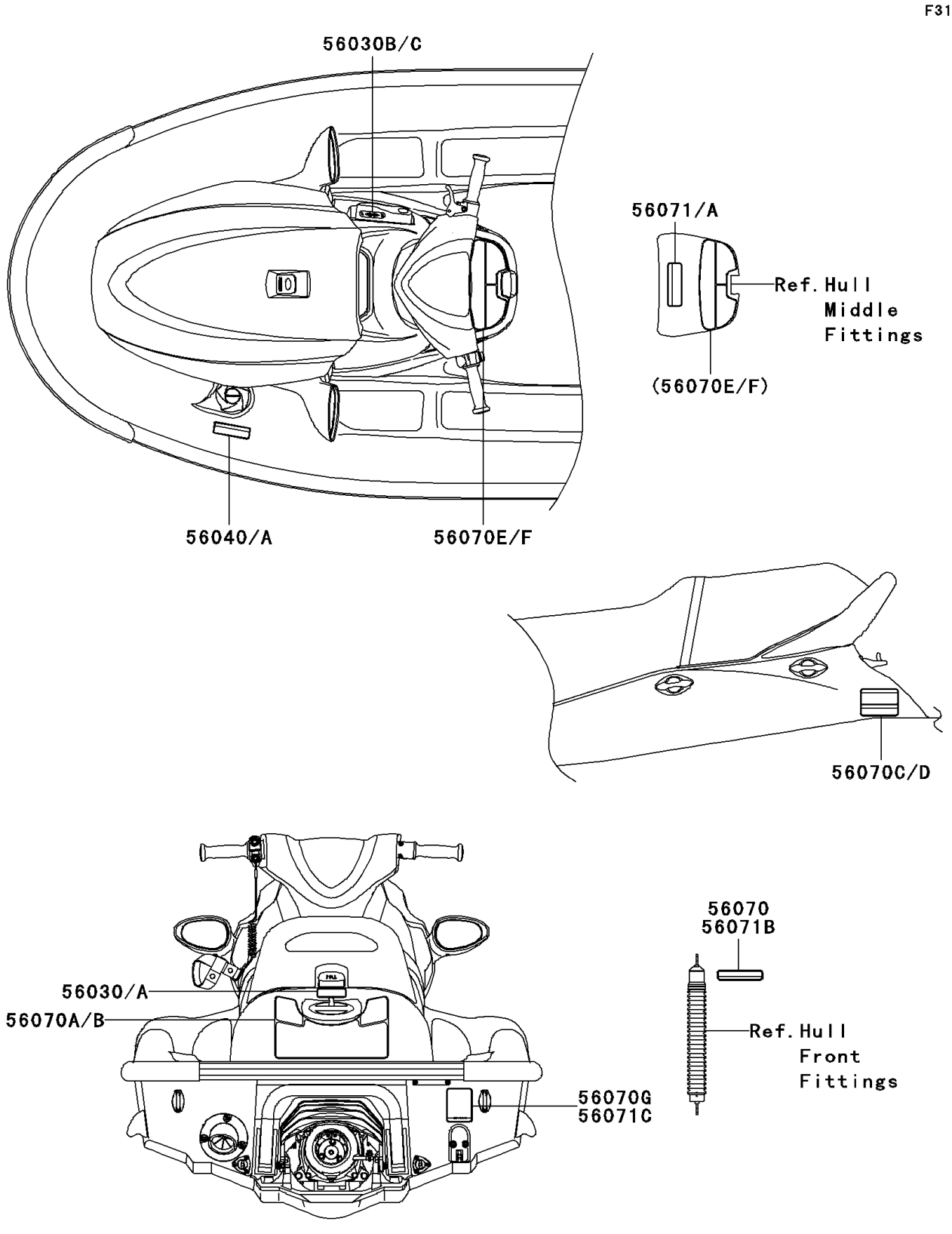

© 2026 Kawasaki Motors Corp., U.S.A.

2009 Jet Ski® STX-15F

PARTS LIST

Labels

ITEM NAME	PART NUMBER	QUANTITY
LABEL,FIRE EXTINGUISHER (Ref # 56030)	56030-3755	1
LABEL,FIRE EXTINGUISHER(FRENCH) (Ref # 56030A)	56030-3757	1
LABEL,REVERSE (Ref # 56030B)	56030-3815	1
LABEL,REVERSE (Ref # 56030C)	56030-3816	1
LABEL-WARNING,GASOLINE (Ref # 56040)	56040-3972	1
LABEL,GASOLINE(FRENCH) (Ref # 56040A)	56040-3978	1
LABEL-WARNING,DAMPER (Ref # 56070)	56070-3876	1
LABEL-WARNING,IMPORTANT SAFETY (Ref # 56070A)	56070-3937	1
LABEL-WARNING,IMPORTANT SAFETY (Ref # 56070B)	56070-3953	1
LABEL-WARNING,GRAB HANDLE&STEP (Ref # 56070C)	56070-3964	1
LABEL-WARNING,GRAB HANDLE&STEP (Ref # 56070D)	56070-3966	1
LABEL-WARNING,TETHER SWITCH (Ref # 56070E)	56070-3970	1
LABEL-WARNING,TETHER SWITCH (Ref # 56070F)	56070-3974	1
LABEL-WARNING,RIGHTING (Ref # 56070G)	56070-3986	1
LABEL-WARNING,AIR VENT ROUTING (Ref # 56071)	56071-3708	1
LABEL-WARNING,AIR VENT ROUTING (Ref # 56071A)	56071-3709	1
LABEL-WARNING,DAMPER (Ref # 56071B)	56071-3737	1
LABEL-WARNING,RIGHTING (Ref # 56071C)	56071-3738	1

© 2026 Kawasaki Motors Corp., U.S.A.