2007 STX-15F

PARTS DIAGRAM

Hull Rear Fittings

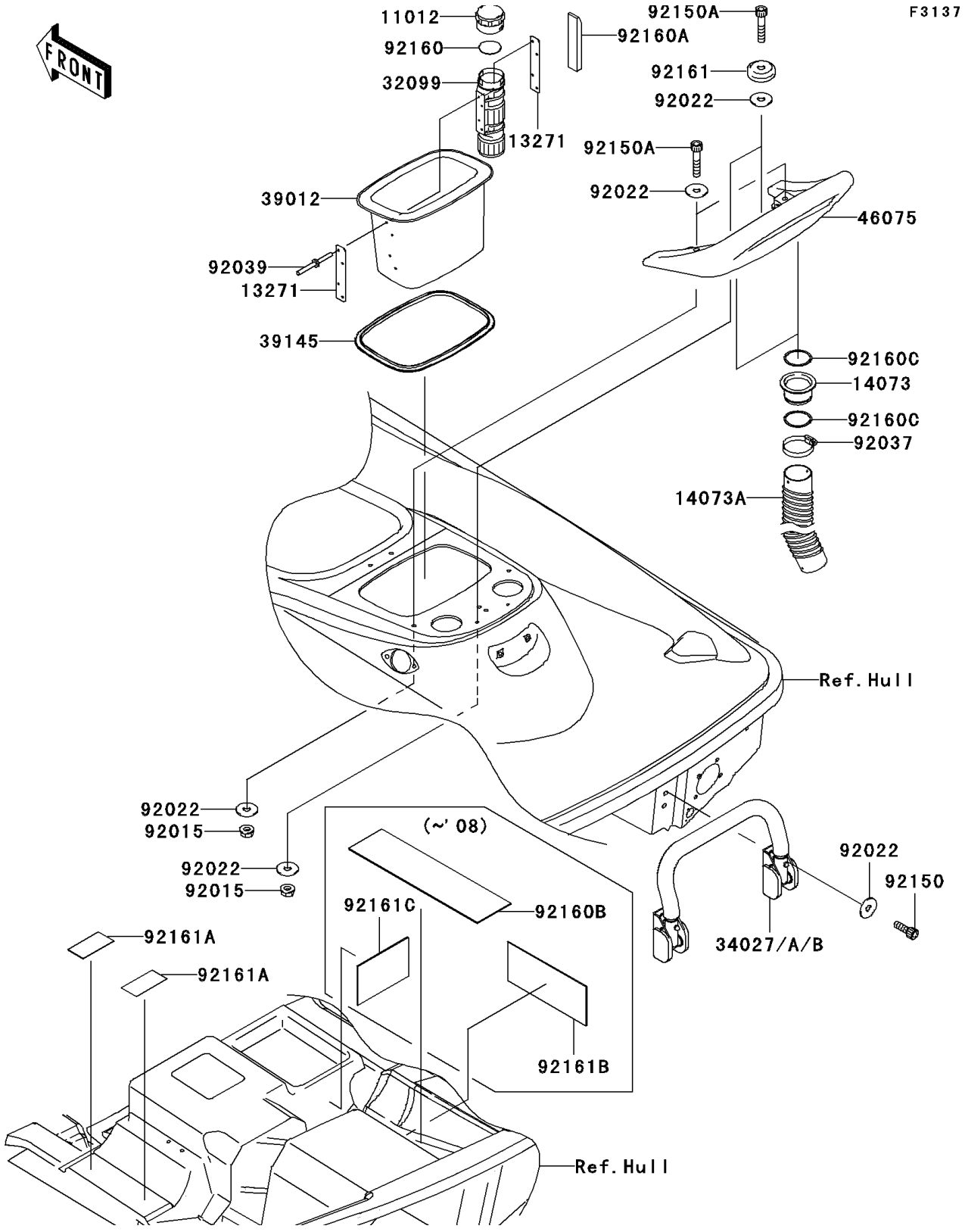

© 2026 Kawasaki Motors Corp., U.S.A.

2007 STX-15F

PARTS LIST

Hull Rear Fittings

ITEM NAME	PART NUMBER	QUANTITY
CAP,FIRE EXTINGUISHER (Ref # 11012)	11012-3766	1
PLATE,FIRE EXTINGUISHER (Ref # 13271)	13271-3775	2
DUCT (Ref # 14073)	14073-3798	2
DUCT (Ref # 14073A)	14073-3799	2
CASE,FIRE EXTINGUISHER (Ref # 32099)	32099-3769	1
STEP-ASSY (Ref # 34027A)	34027-3708	1
CASE-STORAGE,RR (Ref # 39012)	39012-3727	1
TRIM-SEAL,REAR STORAGE (Ref # 39145)	39145-3767	1
GRIP,RR,F.BLACK (Ref # 46075)	46075-3755-6Z	1
NUT,6MM (Ref # 92015)	92015-3767	4
WASHER,6.5X20X1.5 (Ref # 92022)	92022-3710	12
CLAMP (Ref # 92037)	92037-3738	2
RIVET (Ref # 92039)	92039-3783	4
BOLT,SOCKET,6X18 (Ref # 92150)	92150-3775	4
BOLT,SOCKET,6X30 (Ref # 92150A)	92150-3822	4
DAMPER (Ref # 92160)	92160-3814	1
DAMPER (Ref # 92160A)	92160-3821	1
DAMPER (Ref # 92160B)	92160-3839	1
DAMPER (Ref # 92160C)	92160-3910	4
DAMPER (Ref # 92161)	92161-3717	2
DAMPER (Ref # 92161A)	92161-3728	2
DAMPER (Ref # 92161B)	92161-3744	1
DAMPER (Ref # 92161C)	92161-3745	1

© 2026 Kawasaki Motors Corp., U.S.A.