2009 Jet Ski® STX-15F

PARTS DIAGRAM

Throttle

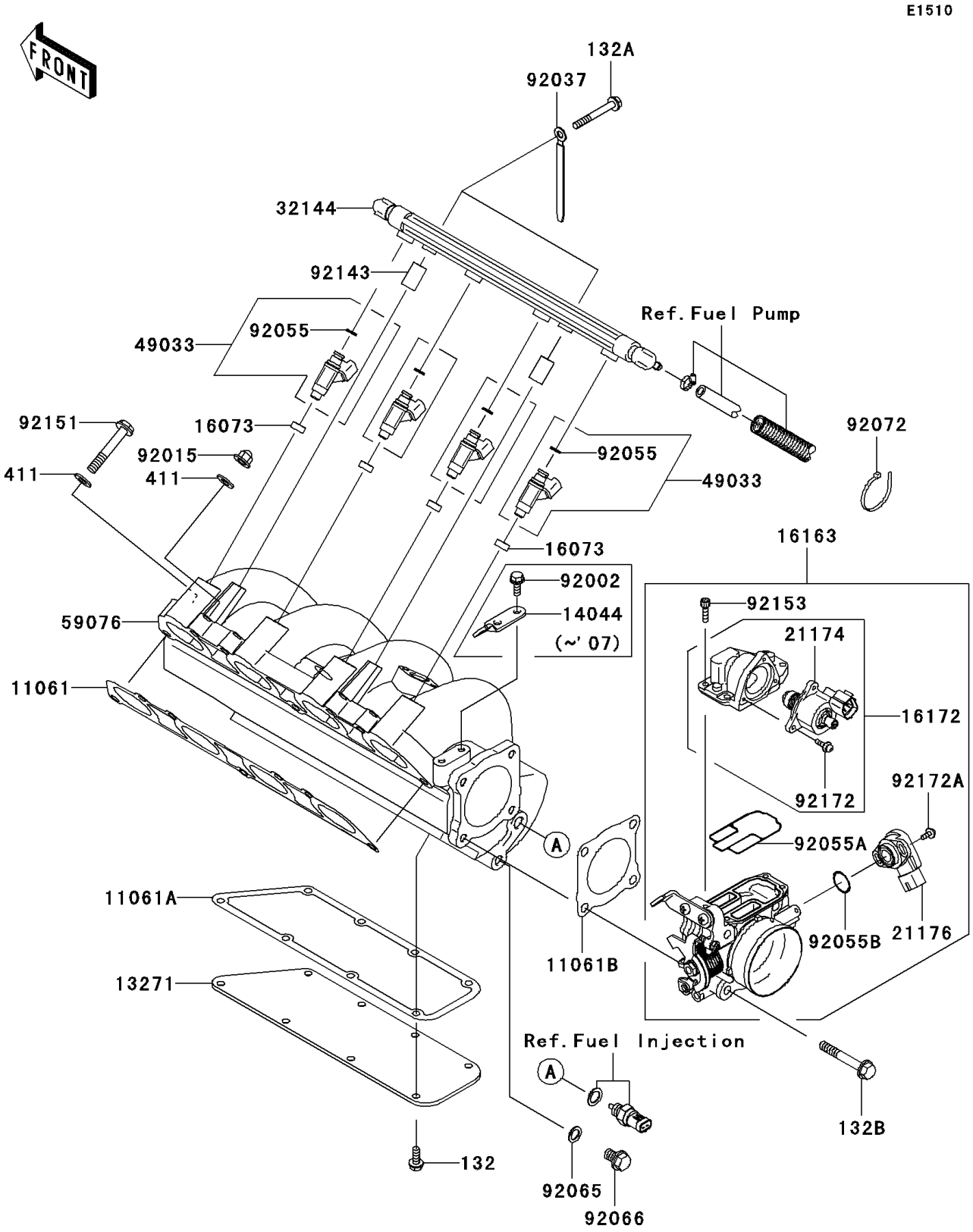

© 2026 Kawasaki Motors Corp., U.S.A.

2009 Jet Ski® STX-15F

PARTS LIST

Throttle

ITEM NAME	PART NUMBER	QUANTITY
GASKET,MANIFOLD (Ref # 11061)	11061-3716	1
GASKET,PLATE (Ref # 11061A)	11061-3737	1
GASKET,THROTTLE (Ref # 11061B)	11061-3738	1
PLATE,MANIFOLD (Ref # 13271)	13271-3899	1
INSULATOR (Ref # 16073)	16073-3707	4
THROTTLE-ASSY,AC60 (Ref # 16163)	16163-3713	1
ACTUATOR (Ref # 16172)	16172-3705	1
MOTOR-ELECTRIC,STM (Ref # 21174)	21174-3706	1
SENSOR,TPS (Ref # 21176)	21176-3762	1
PIPE-ASSY (Ref # 32144)	32144-3705	1
NOZZLE-INJECTION (Ref # 49033)	49033-3707	4
MANIFOLD-INTAKE (Ref # 59076)	59076-3729	1
NUT,CAP,8MM (Ref # 92015)	92015-1371	4
CLAMP,L=100 (Ref # 92037)	92037-3736	2
RING-O,INJECTION NOZZLE (Ref # 92055)	92055-1622	4
RING-O (Ref # 92055A)	92055-3773	1
RING-O (Ref # 92055B)	92055-3774	1
GASKET,10.5X16X1 (Ref # 92065)	92065-058	1
PLUG (Ref # 92066)	92066-3781	1
BAND,L=188.85 (Ref # 92072)	92072-0105	1
COLLAR (Ref # 92143)	92143-3731	2
BOLT,8X60 (Ref # 92151)	92151-3730	3
BOLT (Ref # 92153)	92153-3723	4
SCREW (Ref # 92172)	92172-3710	3
SCREW (Ref # 92172A)	92172-3711	2
BOLT-FLANGED-SMALL,6X16 (Ref # 132)	132BD0616	8
BOLT-FLANGED-SMALL,6X50 (Ref # 132A)	132BD0650	2
BOLT-FLANGED-SMALL,8X55 (Ref # 132B)	132BD0855	4
WASHER-PLAIN,8MM (Ref # 411)	411S0800	7

© 2026 Kawasaki Motors Corp., U.S.A.