2008 KLR™650

PARTS DIAGRAM

Side Covers/Chain Cover

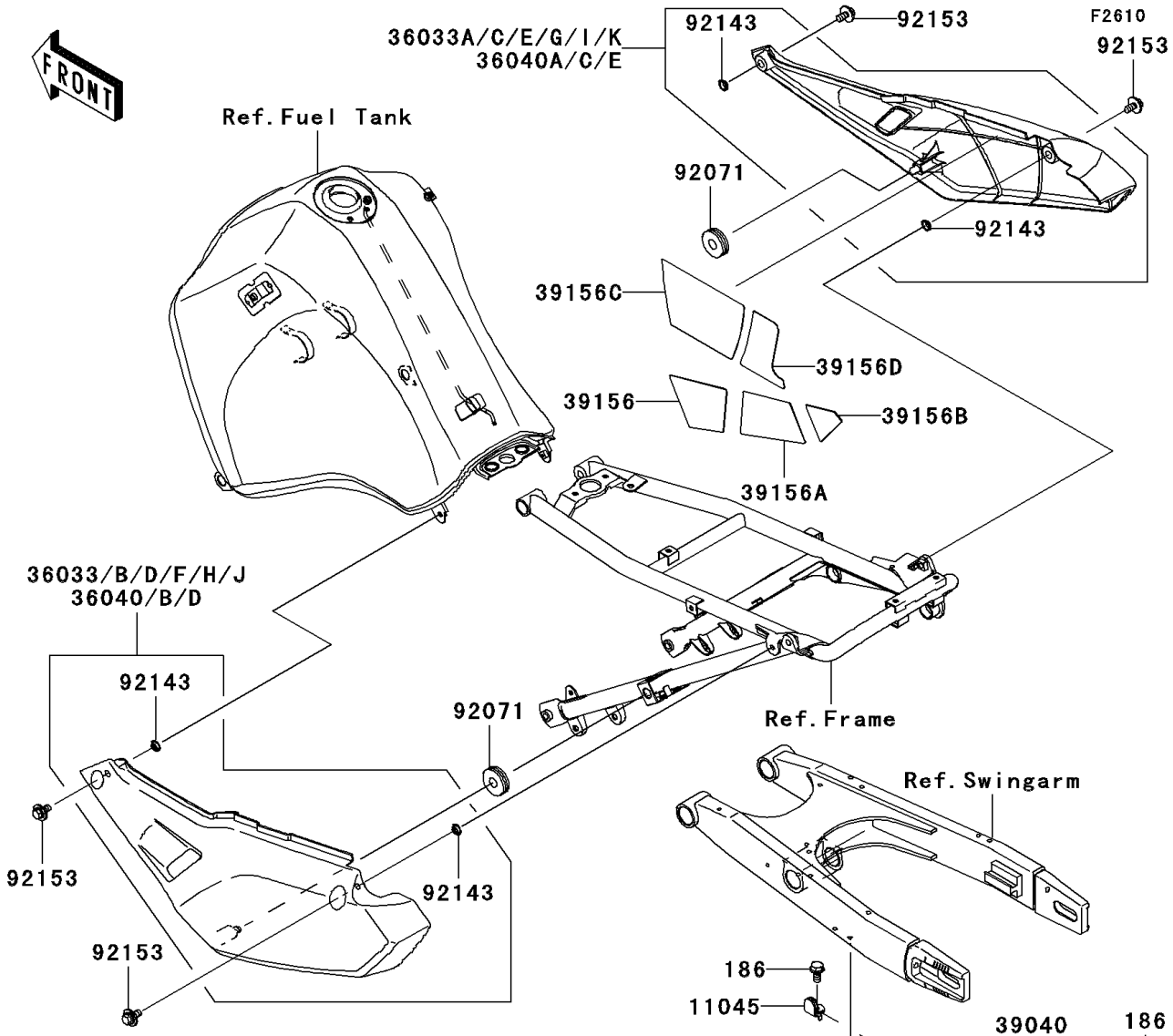

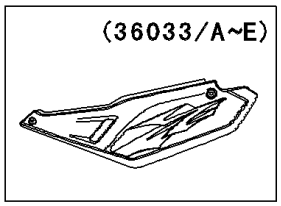

WD

(36033/A)	Ebony
(36033B/C)	Red
(36033D/E)	Blue

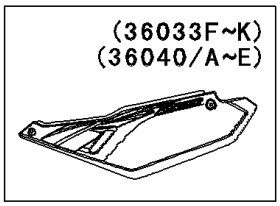

WD

('09)	(36033F/G)	Ebony-Ebony
	(36033H/I)	Ebony-Red
	(36033J/K)	Ebony-Blue
('10)	(36040/A)	Ebony-Red
	(36040B/C)	Ebony-Ebony
	(36040D/E)	Ebony-Blue

© 2026 Kawasaki Motors Corp., U.S.A.

2008 KLR™650

PARTS LIST

Side Covers/Chain Cover

ITEM NAME	PART NUMBER	QUANTITY
BOLT-FLANGED,6X40 (Ref # 130)	130BA0640	2
BOLT-UPSET-WP,6X12 (Ref # 186)	186BA0612	5
BRACKET,CHAIN CASE,FR (Ref # 11045)	11045-1335	2
BRACKET,CHAIN CASE,RR (Ref # 11054)	11054-0390	1
COVER-SIDE,LH,EBONY (Ref # 36033)	36033-5261-6C	1
COVER-SIDE,RH,EBONY (Ref # 36033A)	36033-5262-6C	1
COVER-SIDE,LH,S.RED (Ref # 36033B)	36033-5263-6B	1
COVER-SIDE,RH,S.RED (Ref # 36033C)	36033-5264-6B	1
COVER-SIDE,LH,BLUE (Ref # 36033D)	36033-5265-6U	1
COVER-SIDE,RH,BLUE (Ref # 36033E)	36033-5266-6U	1
COVER-ASSY-CHAIN CASE (Ref # 39040)	39040-0002	1
PAD,SIDE COVER,RH,LWR,FR (Ref # 39156)	39156-0184	1
PAD,SIDE COVER,RH,LWR,CNT (Ref # 39156A)	39156-0189	1
PAD,SIDE COVER,RH,LWR,RR (Ref # 39156B)	39156-0190	1
PAD,SIDE COVER,RH,UPP,FR (Ref # 39156C)	39156-0262	1
PAD,SIDE COVER,RH,UPP,RR (Ref # 39156D)	39156-0263	1
GROMMET (Ref # 92071)	92071-056	2
COLLAR (Ref # 92143)	92143-1196	4
BOLT,6X12 (Ref # 92153)	92153-0503	4

© 2026 Kawasaki Motors Corp., U.S.A.