2022 VULCAN® S

PARTS DIAGRAM

Footrests

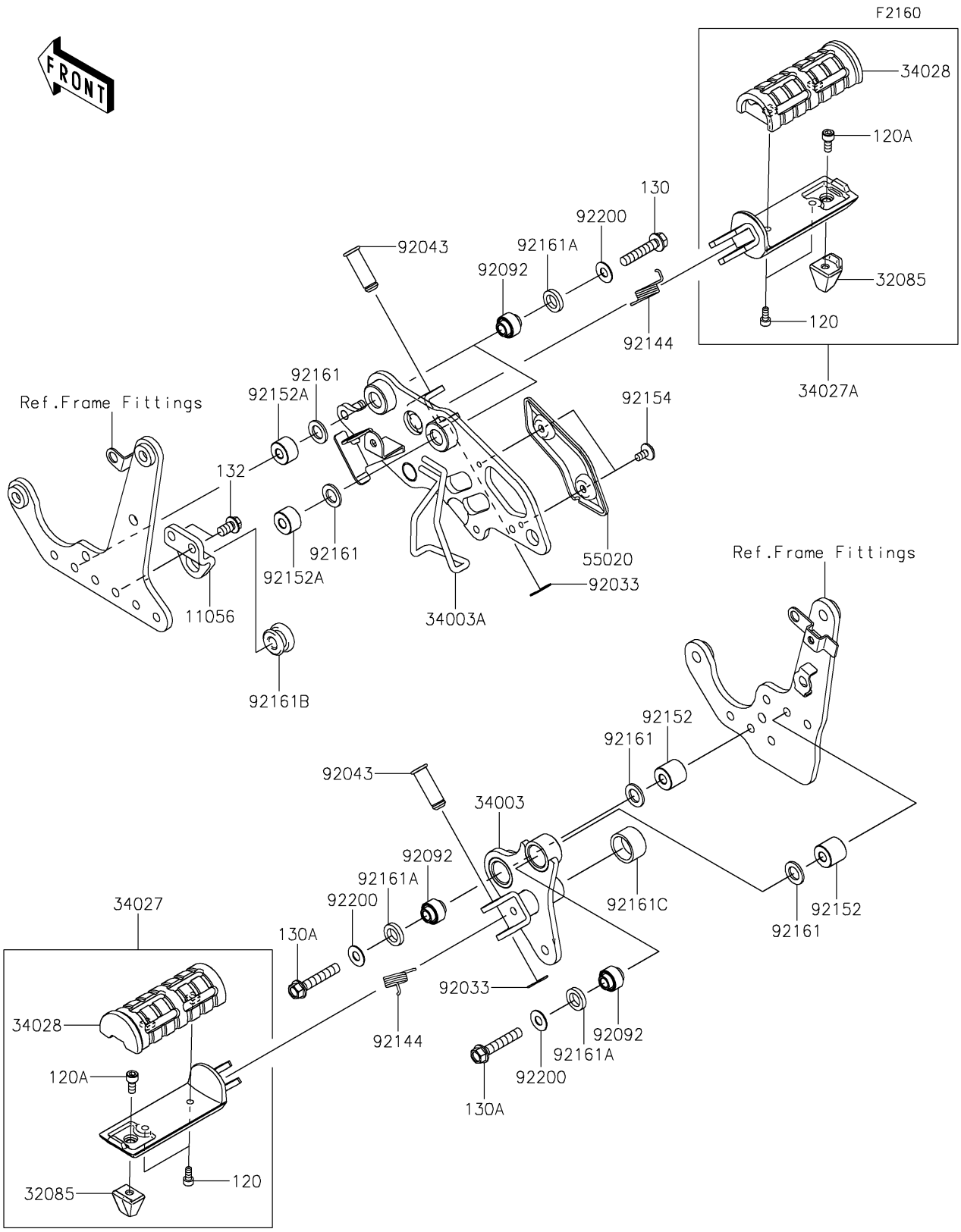

© 2026 Kawasaki Motors Corp., U.S.A.

2022 VULCAN® S

PARTS LIST

Footrests

ITEM NAME	PART NUMBER	QUANTITY
BRACKET,STEP,FR,RH (Ref # 11056)	11056-7031	1
STOPPER,BANK SENSOR (Ref # 32085)	32085-0770	2
HOLDER-STEP,LH (Ref # 34003)	34003-0141	1
HOLDER-STEP,RH (Ref # 34003A)	34003-0156	1
STEP-ASSY,LH (Ref # 34027)	34027-0012	1
STEP-ASSY,RH (Ref # 34027A)	34027-0013	1
STEP,RUBBER (Ref # 34028)	34028-0338	2
GUARD,STEP HOLDER,RH (Ref # 55020)	55020-1880	1
RING-SNAP,10MM (Ref # 92033)	92033-1166	2
PIN,12X37 (Ref # 92043)	92043-1358	2
BUSHING-RUBBER,8.4X20X18 (Ref # 92092)	92092-1018-SP	4
SPRING,STEP RETURN (Ref # 92144)	92144-1126	2
COLLAR,8.4X21X19 (Ref # 92152)	92152-1952	2
COLLAR,8.4X21X13 (Ref # 92152A)	92152-1953	2
BOLT,SOCKET,6X12 (Ref # 92154)	92154-0951	2
DAMPER,12.5X21X2 (Ref # 92161)	92161-0943	4
DAMPER,12.5X20X4 (Ref # 92161A)	92161-0944	4
DAMPER (Ref # 92161B)	92161-1523	1
DAMPER,21.5X27.5X16 (Ref # 92161C)	92161-1702	1
WASHER,8.5X19X1 (Ref # 92200)	92200-1733	4
BOLT-SOCKET,5X12 (Ref # 120)	120CB0512	4
BOLT-SOCKET,6X14 (Ref # 120A)	120CB0614	2
BOLT-FLANGED,8X40 (Ref # 130)	130BB0840	2
BOLT-FLANGED,8X45 (Ref # 130A)	130BB0845	2
BOLT-FLANGED-SMALL,8X14 (Ref # 132)	132BB0814	2

© 2026 Kawasaki Motors Corp., U.S.A.