2023 VULCAN® S

PARTS DIAGRAM

Oil Pan

E1434

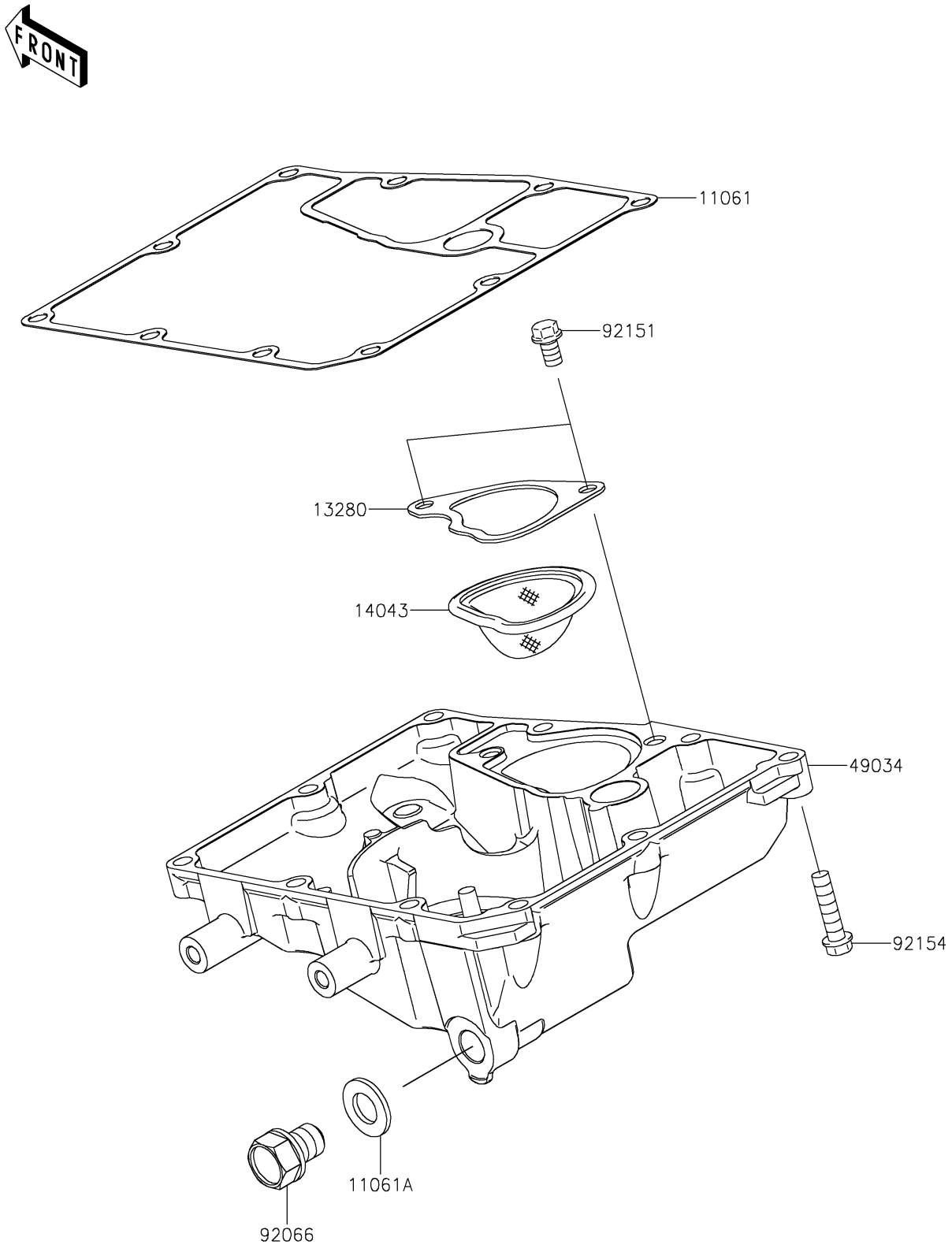

© 2026 Kawasaki Motors Corp., U.S.A.

2023 VULCAN® S

PARTS LIST

Oil Pan

ITEM NAME	PART NUMBER	QUANTITY
GASKET,OIL PAN (Ref # 11061)	11061-0167	1
GASKET,12X22X2 (Ref # 11061A)	11061-0417	1
HOLDER,OIL FILTER (Ref # 13280)	13280-0134	1
FILTER,OIL(SCAVENGE) (Ref # 14043)	14043-0008	1
PAN-OIL (Ref # 49034)	49034-0561	1
PLUG,OIL DRAIN,12X15 (Ref # 92066)	92066-0767	1
BOLT,FLANGED-SMALL,6X10 (Ref # 92151)	92151-1389	2
BOLT,FLANGED,6X25 (Ref # 92154)	92154-0819	10

© 2026 Kawasaki Motors Corp., U.S.A.