# 2022 VULCAN® S

## PARTS DIAGRAM

### Cylinder/Piston(s)

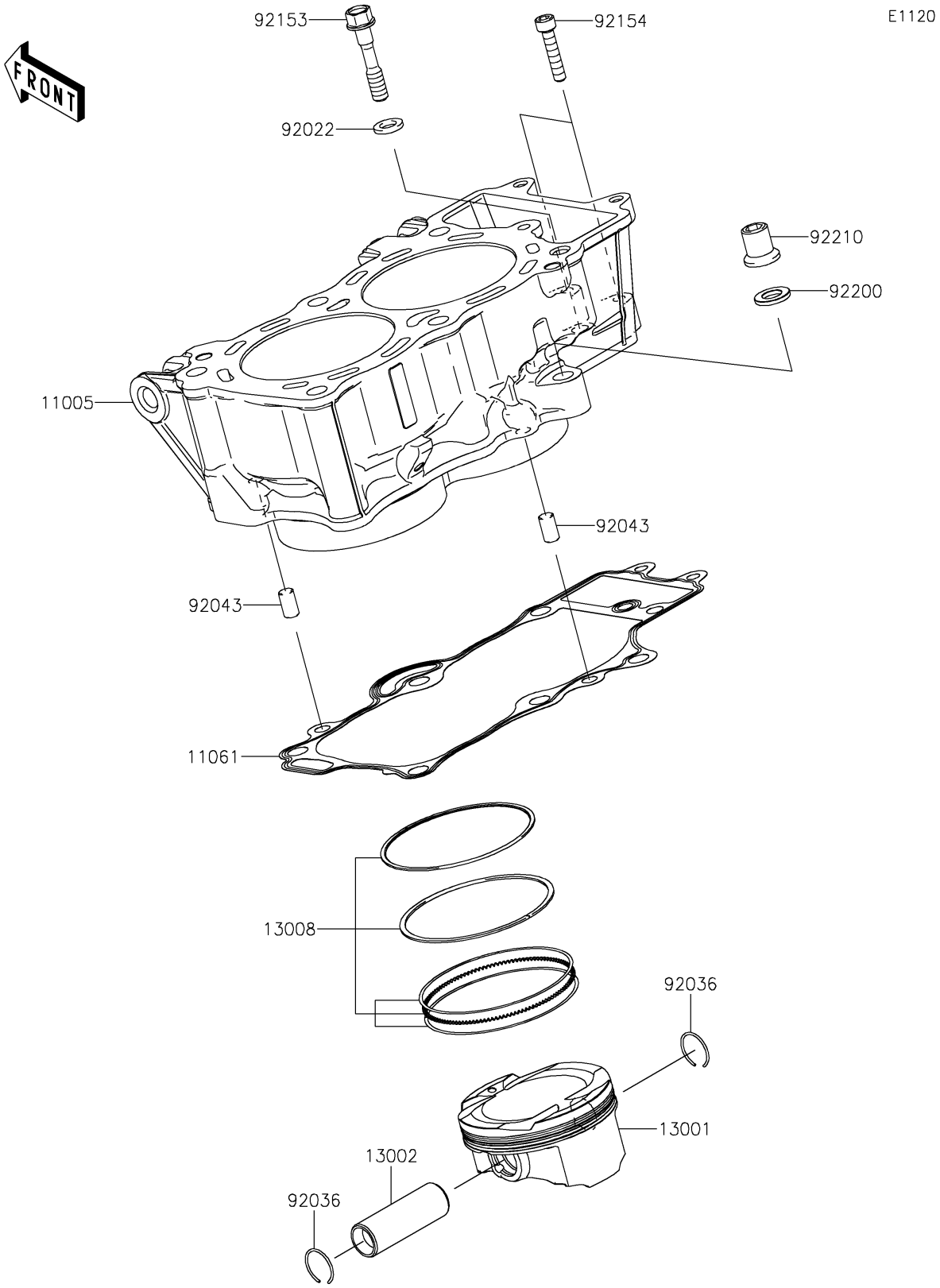


© 2026 Kawasaki Motors Corp., U.S.A.

# 2022 VULCAN® S

## PARTS LIST

### Cylinder/Piston(s)

| ITEM NAME | PART NUMBER | QUANTITY |
|---|---|---|
| CYLINDER-ENGINE (Ref # 11005) | 11005-0580 | 1 |
| GASKET,CYLINDER BASE (Ref # 11061) | 11061-0171 | 1 |
| PISTON-ENGINE (Ref # 13001) | 13001-0760 | 2 |
| PIN-PISTON (Ref # 13002) | 13002-0007 | 2 |
| RING-SET-PISTON (Ref # 13008) | 13008-1196 | 2 |
| WASHER,9X15.5X2 (Ref # 92022) | 92022-1401 | 1 |
| RING-SNAP,PISTON PIN (Ref # 92036) | 92036-008 | 4 |
| PIN,8X14 (Ref # 92043) | 92043-1567 | 2 |
| BOLT,8X43 (Ref # 92153) | 92153-1011 | 1 |
| BOLT,SOCKET,6X30 (Ref # 92154) | 92154-0116 | 2 |
| WASHER,10.5X19X2.3 (Ref # 92200) | 92200-0363 | 1 |
| NUT (Ref # 92210) | 92210-0223 | 1 |

© 2026 Kawasaki Motors Corp., U.S.A.