2003 Vulcan 1500 Nomad Fi

PARTS DIAGRAM

Right Engine Cover(s)

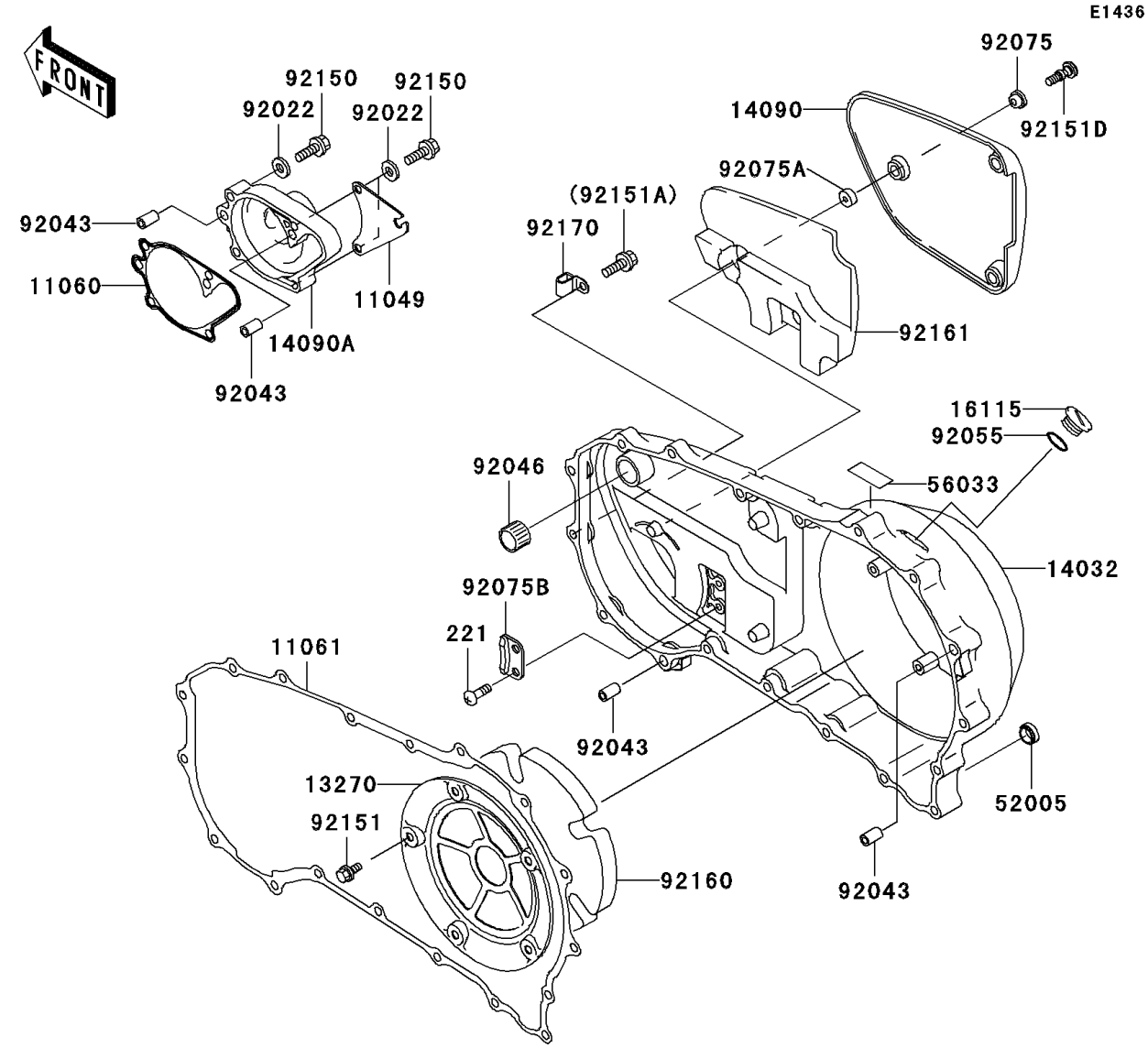

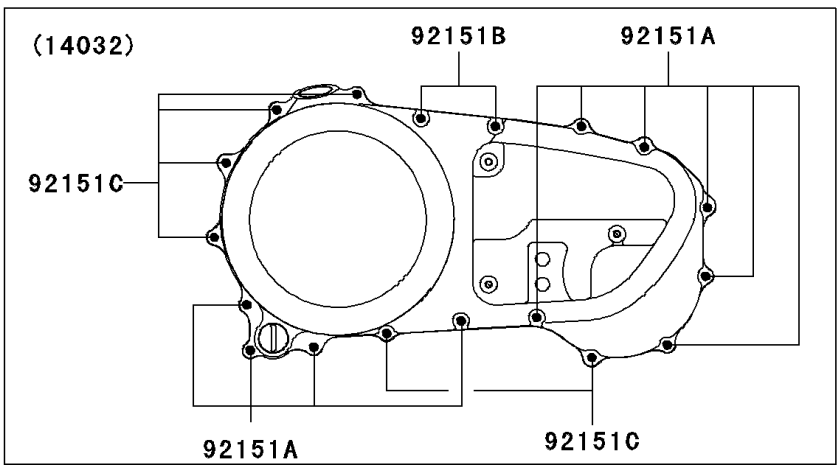

© 2026 Kawasaki Motors Corp., U.S.A.

2003 Vulcan 1500 Nomad Fi

PARTS LIST

Right Engine Cover(s)

ITEM NAME	PART NUMBER	QUANTITY
SCREW-CSK-CROS,6X12 (Ref # 221)	221B0612	2
BRACKET (Ref # 11049)	11049-1789	1
GASKET,WATER PUMP COVER (Ref # 11060)	11060-1124	1
GASKET,CLUTCH COVER (Ref # 11061)	11061-1081	1
PLATE (Ref # 13270)	13270-1592	1
COVER-CLUTCH (Ref # 14032)	14032-1493	1
COVER,CLUTCH OUTER (Ref # 14090)	14090-1678	1
COVER,WATER PUMP (Ref # 14090A)	14090-1932	1
CAP-OIL FILLER (Ref # 16115)	16115-1063	1
GAUGE,OIL LEVEL (Ref # 52005)	52005-1009	1
LABEL-MANUAL,OIL CAPACITY (Ref # 56033)	56033-1156	1
WASHER,6.1X12X1 (Ref # 92022)	92022-077	4
PIN,6.2X8X14 (Ref # 92043)	92043-1263	4
BEARING-NEEDLE,HK1212 (Ref # 92046)	92046-1163	1
RING-O,31.7X2.4 (Ref # 92055)	92055-049	1
DAMPER (Ref # 92075)	92075-1855	3
DAMPER (Ref # 92075A)	92075-1856	3
DAMPER (Ref # 92075B)	92075-1905	1
BOLT,6X30 (Ref # 92150)	92150-1021	4
BOLT,6X10 (Ref # 92151)	92151-1064	5
BOLT,6X25 (Ref # 92151A)	92151-1130	10
BOLT,6X30 (Ref # 92151B)	92151-1134	2
BOLT,6X35 (Ref # 92151C)	92151-1135	6
BOLT,L=22.5 (Ref # 92151D)	92151-1273	3
DAMPER (Ref # 92160)	92160-1716	1
DAMPER (Ref # 92161)	92161-1139	1
CLAMP,METER HARNESS (Ref # 92170)	92170-1804	1

© 2026 Kawasaki Motors Corp., U.S.A.