2022 MULE PRO-FXT™ RANCH EDITION

Kawasaki
Let the Good Times Roll®

PARTS DIAGRAM

Control

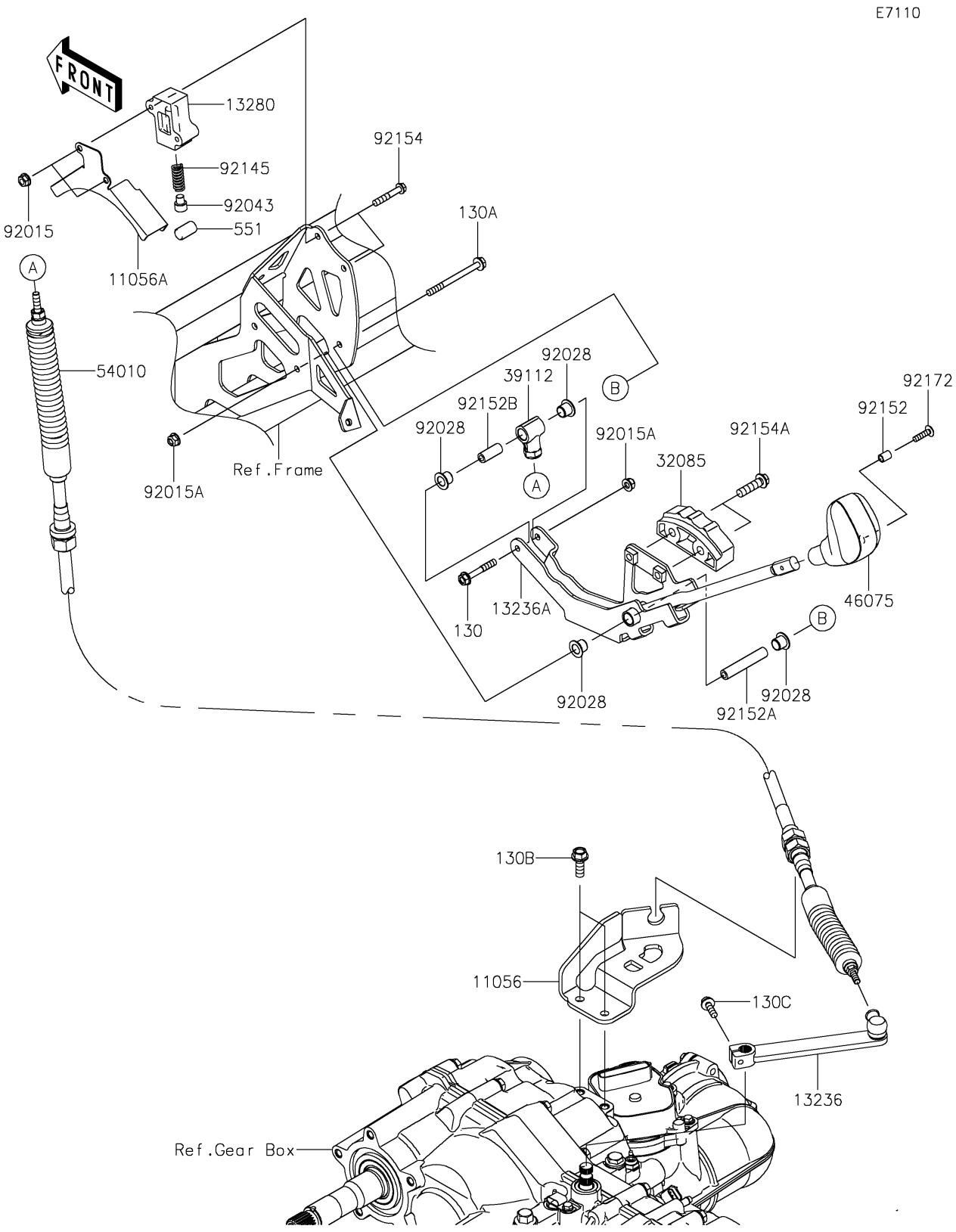

© 2026 Kawasaki Motors Corp., U.S.A.

2022 MULE PRO-FXT™ RANCH EDITION

Kawasaki
Let the Good Times Roll®

PARTS LIST

Control

ITEM NAME	PART NUMBER	QUANTITY
BRACKET,T/M SIDE (Ref # 11056)	11056-2946	1
BRACKET,DUST COVER (Ref # 11056A)	11056-7274	1
LEVER-COMP,T/M SIDE (Ref # 13236)	13236-0747	1
LEVER-COMP,SHIFT (Ref # 13236A)	13236-0748	1
HOLDER (Ref # 13280)	13280-0776	1
STOPPER (Ref # 32085)	32085-0748	1
RODEND-TIE (Ref # 39112)	39112-0020	1
GRIP (Ref # 46075)	46075-0569	1
CABLE,SHIFT (Ref # 54010)	54010-0601	1
NUT,FLANGED,6MM (Ref # 92015)	92015-1367	2
NUT,LOCK,FLANGED,6MM (Ref # 92015A)	92015-1675	2
BUSHING (Ref # 92028)	92028-1507	4
PIN (Ref # 92043)	92043-0790	1
SPRING (Ref # 92145)	92145-1578	1
COLLAR,5.6X8X10.5 (Ref # 92152)	92152-1545	1
COLLAR,6X10X56.5 (Ref # 92152A)	92152-1823	1
COLLAR,6X10X25 (Ref # 92152B)	92152-1854	1
BOLT,FLANGED,6X35 (Ref # 92154)	92154-1544	2
BOLT,FLANGED,8X30 (Ref # 92154A)	92154-1907	2
SCREW,5X20 (Ref # 92172)	92172-2081	1
BOLT-FLANGED,6X40 (Ref # 130)	130BA0640	1
BOLT-FLANGED,6X70 (Ref # 130A)	130BA0670	1
BOLT-FLANGED,8X22 (Ref # 130B)	130BA0822	2
BOLT-FLANGED,6X20 (Ref # 130C)	130CA0620	1
PIN-DOWEL,12X20 (Ref # 551)	551R1220	1

© 2026 Kawasaki Motors Corp., U.S.A.