2023 MULE PRO-FXT™

PARTS DIAGRAM

Labels

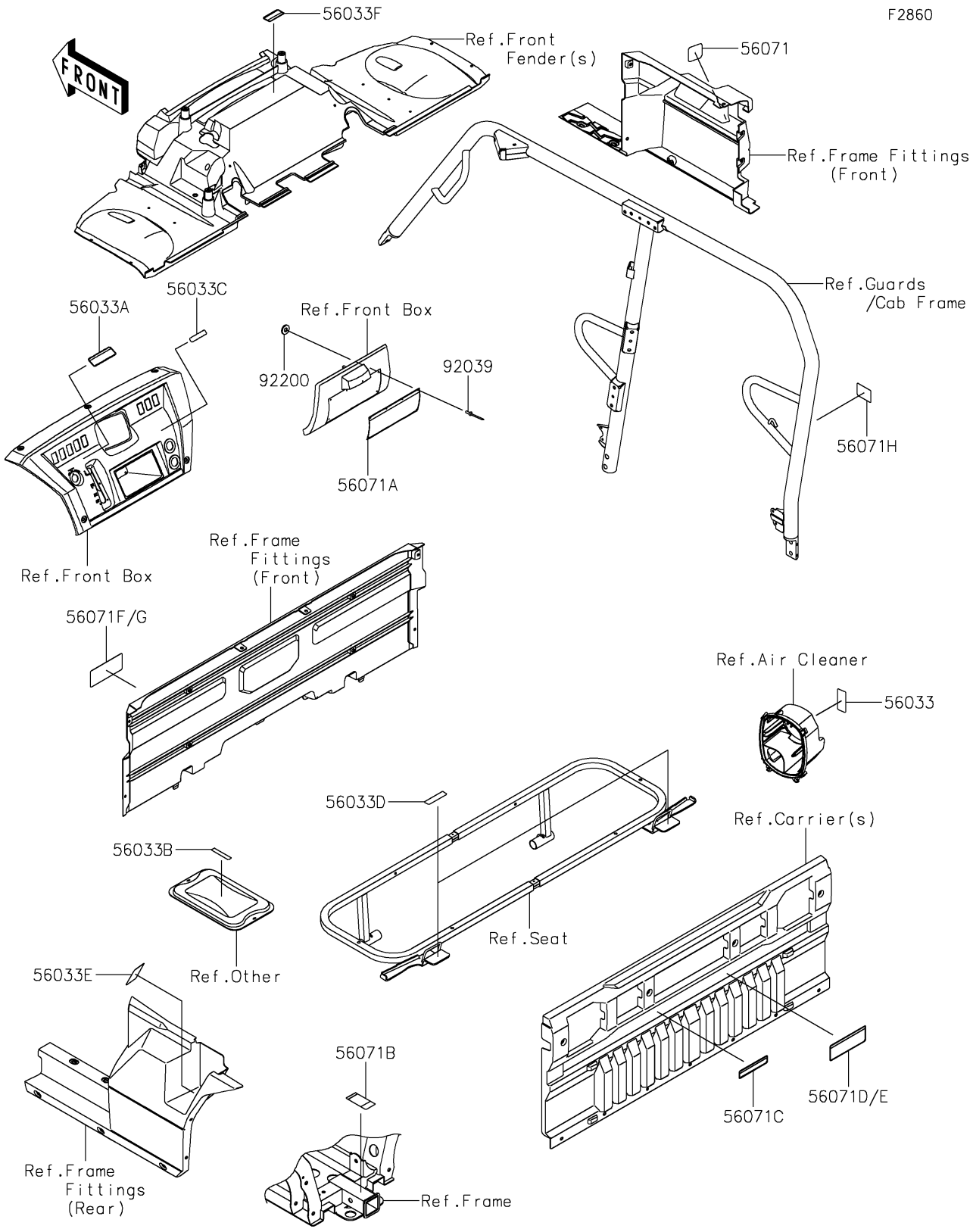

© 2026 Kawasaki Motors Corp., U.S.A.

2023 MULE PRO-FXT™

PARTS LIST

Labels

ITEM NAME	PART NUMBER	QUANTITY
LABEL-MANUAL,AIR CLEANER (Ref # 56033)	56033-0724	1
LABEL-MANUAL,SHIFT NOTICE (Ref # 56033A)	56033-0822	1
LABEL-MANUAL,STORAGE MAX LOAD (Ref # 56033B)	56033-0966	1
LABEL-MANUAL,DC OUTLET (Ref # 56033C)	56033-0997	1
LABEL-MANUAL,REAR SEAT (Ref # 56033D)	56033-0999	2
LABEL-MANUAL,DRIVE BELT (Ref # 56033E)	56033-1000	1
LABEL-MANUAL,FRONT HOOD (Ref # 56033F)	56033-1379	1
LABEL-WARNING,GASOLINE (Ref # 56071)	56071-0588	1
LABEL-WARNING,GENERAL (Ref # 56071A)	56071-0709	1
LABEL-WARNING,TRAILER HITCH (Ref # 56071B)	56071-0711	1
LABEL-WARNING,SCREEN OPERATION (Ref # 56071C)	56071-0712	1
LABEL-WARNING,CARGO CAPA. (Ref # 56071D)	56071-0713	1
LABEL-WARNING,CARGO CAPA. (Ref # 56071E)	56071-0714	1
LABEL-WARNING,TIRE&LOAD (Ref # 56071F)	56071-0719	1
LABEL-WARNING,TIRE&LOAD (Ref # 56071G)	56071-0721	1
LABEL-WARNING,BED OPERATION (Ref # 56071H)	56071-0979	2
RIVET,3.2X8 (Ref # 92039)	92039-3763	6
WASHER,3.5X8X1 (Ref # 92200)	92200-1251	6

© 2026 Kawasaki Motors Corp., U.S.A.