2023 MULE PRO-FXT™

PARTS DIAGRAM

Steering Wheel

F2311



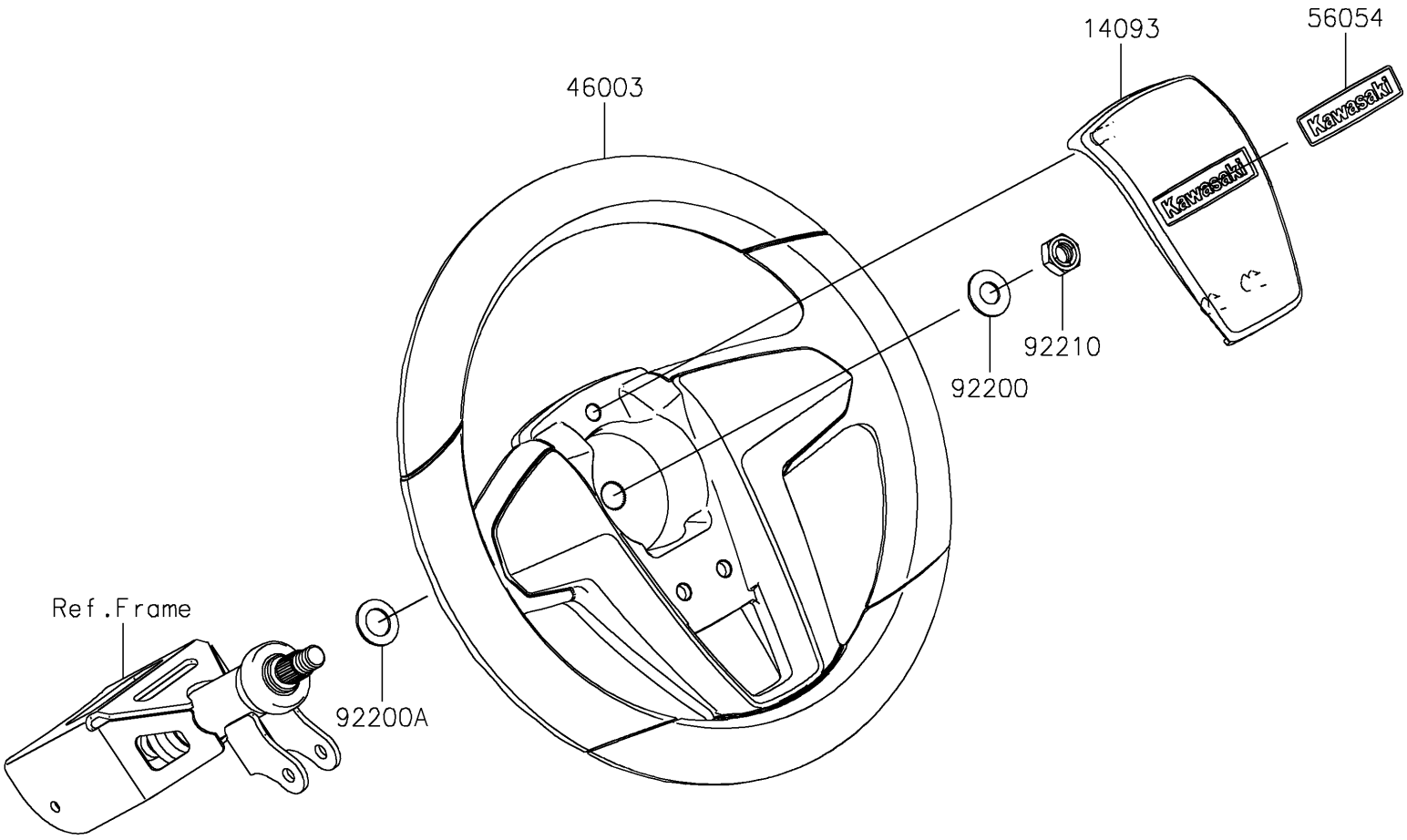

© 2026 Kawasaki Motors Corp., U.S.A.

2023 MULE PRO-FXT™

PARTS LIST

Steering Wheel

ITEM NAME	PART NUMBER	QUANTITY
COVER,HORN SWITCH (Ref # 14093)	14093-1144	1
HANDLE (Ref # 46003)	46003-0808	1
MARK,CENTER LOGO,KAWASAKI (Ref # 56054)	56054-2907	1
WASHER,12.1X25X1.6 (Ref # 92200)	92200-0455	1
WASHER,15X25X1.6 (Ref # 92200A)	92200-0460	1
NUT,LOCK,12MM (Ref # 92210)	92210-1249	1

© 2026 Kawasaki Motors Corp., U.S.A.