2021 MULE PRO-FXR™

PARTS DIAGRAM

Decals(Gray)(KMFNN/KMFNL)

F2861A

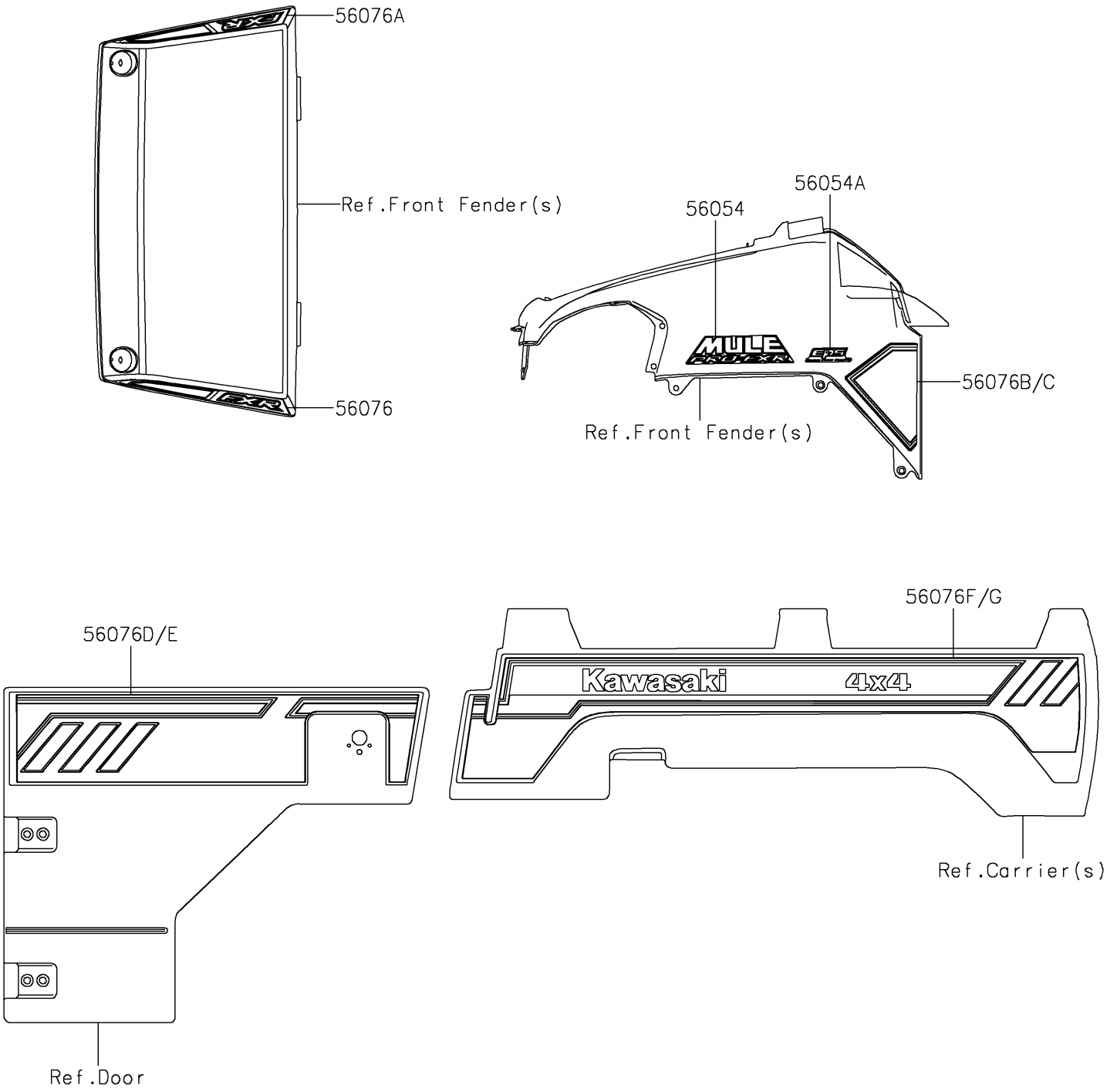

© 2026 Kawasaki Motors Corp., U.S.A.

2021 MULE PRO-FXR™

PARTS LIST

Decals(Gray)(KMFNN/KMFNL)

ITEM NAME	PART NUMBER	QUANTITY
MARK,FR FENDER,MULE PRO-FXR (Ref # 56054)	56054-2287	2
MARK,FR FENDER,EPS (Ref # 56054A)	56054-2778	2
PATTERN,FR FENDER COVER,LH (Ref # 56076)	56076-1508	1
PATTERN,FR FENDER COVER,RH (Ref # 56076A)	56076-1509	1
PATTERN,FR FENDER,LH (Ref # 56076B)	56076-1510	1
PATTERN,FR FENDER,RH (Ref # 56076C)	56076-1511	1
PATTERN,DOOR COVER,LH (Ref # 56076D)	56076-1512	1
PATTERN,DOOR COVER,RH (Ref # 56076E)	56076-1513	1
PATTERN,SIDE GUARD,LH (Ref # 56076F)	56076-1514	1
PATTERN,SIDE GUARD,RH (Ref # 56076G)	56076-1515	1

© 2026 Kawasaki Motors Corp., U.S.A.