2021 MULE PRO-FXR™

PARTS DIAGRAM

Reflectors(CN)

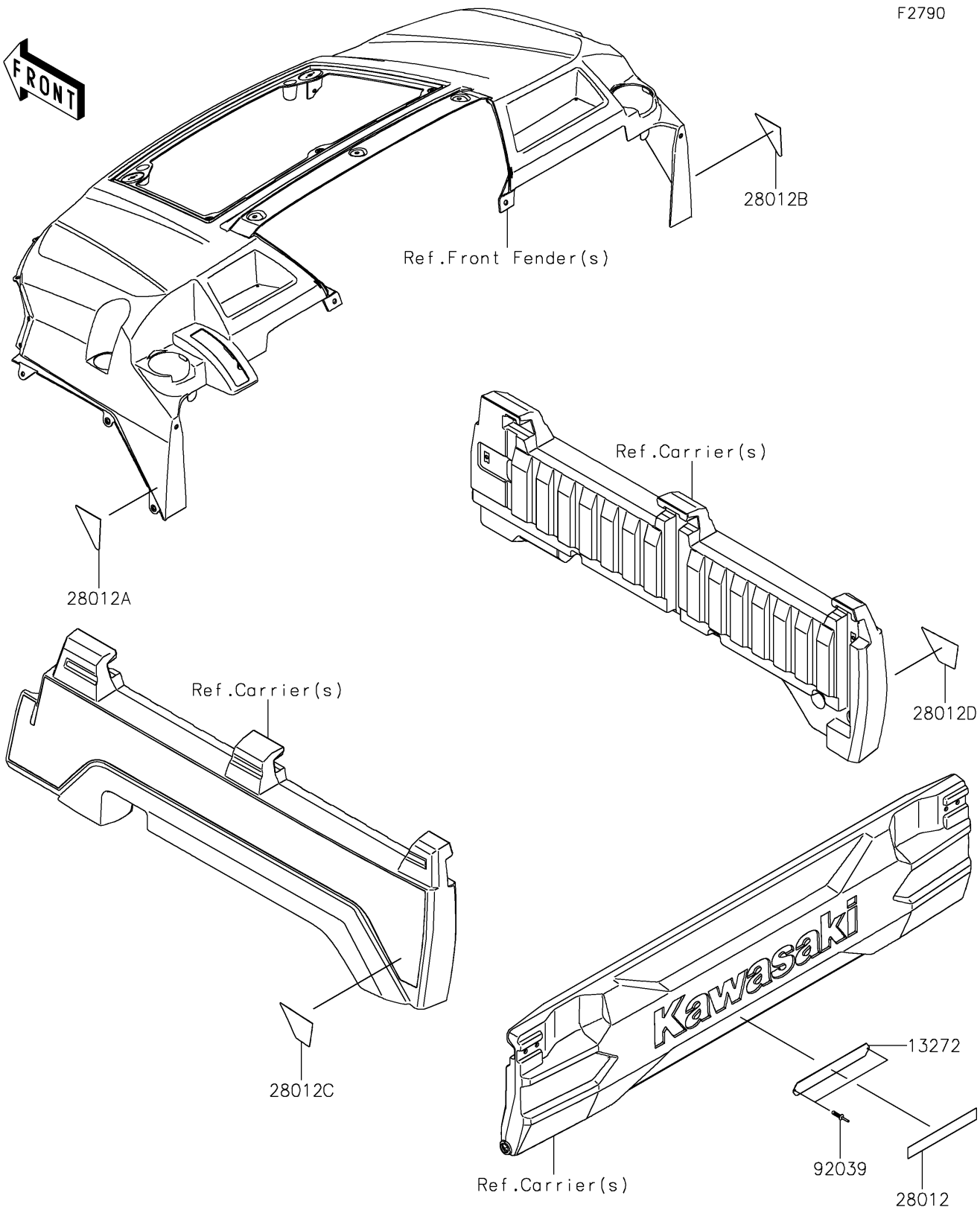

© 2026 Kawasaki Motors Corp., U.S.A.

2021 MULE PRO-FXR™

PARTS LIST

Reflectors(CN)

ITEM NAME	PART NUMBER	QUANTITY
PLATE,REFLECTOR (Ref # 13272)	13272-1819	1
REFLECTOR-REFLEX,RR,RED (Ref # 28012)	28012-0023	1
REFLECTOR-REFLEX,LH,YELLOW (Ref # 28012A)	28012-0031	1
REFLECTOR-REFLEX,RH,YELLOW (Ref # 28012B)	28012-0032	1
REFLECTOR-REFLEX,LH,RED (Ref # 28012C)	28012-0040	1
REFLECTOR-REFLEX,RH,RED (Ref # 28012D)	28012-0041	1
RIVET,3.2X14.2 (Ref # 92039)	92039-0744	2

© 2026 Kawasaki Motors Corp., U.S.A.