2022 MULE PRO-FXR™

PARTS DIAGRAM

Headlight(s)

F2710

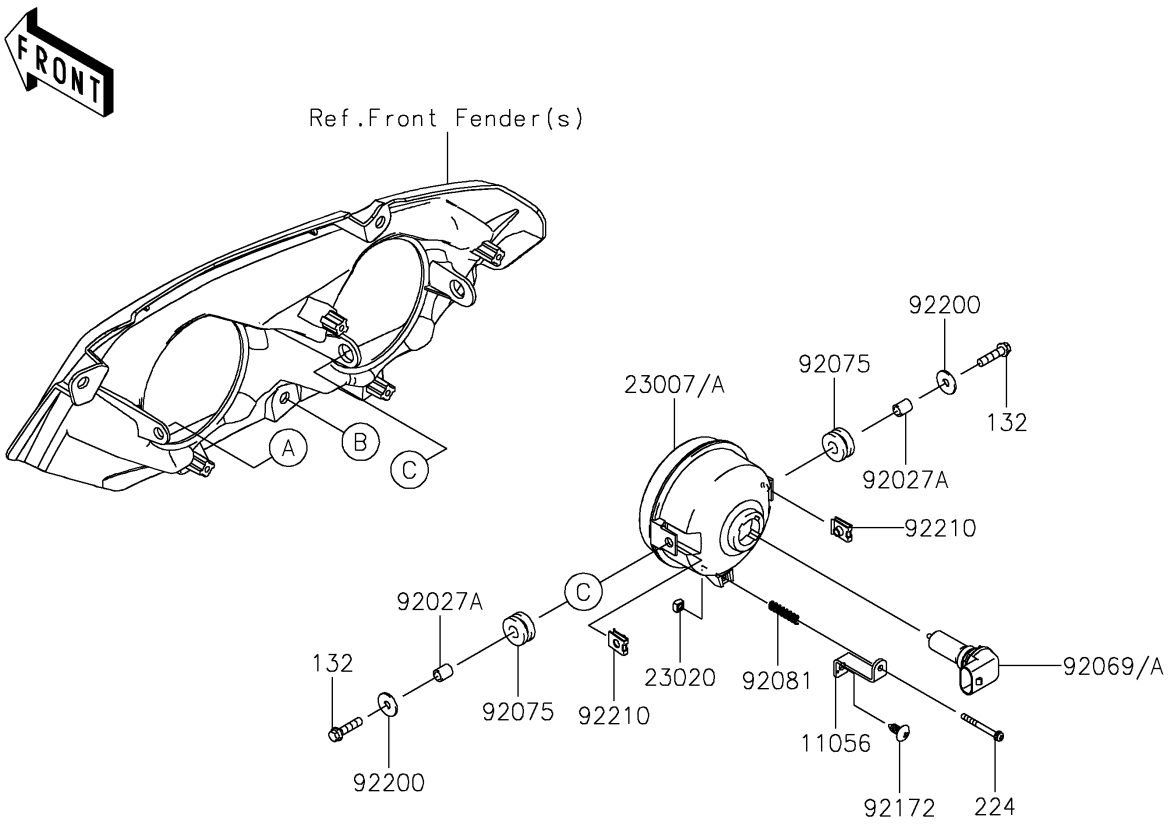

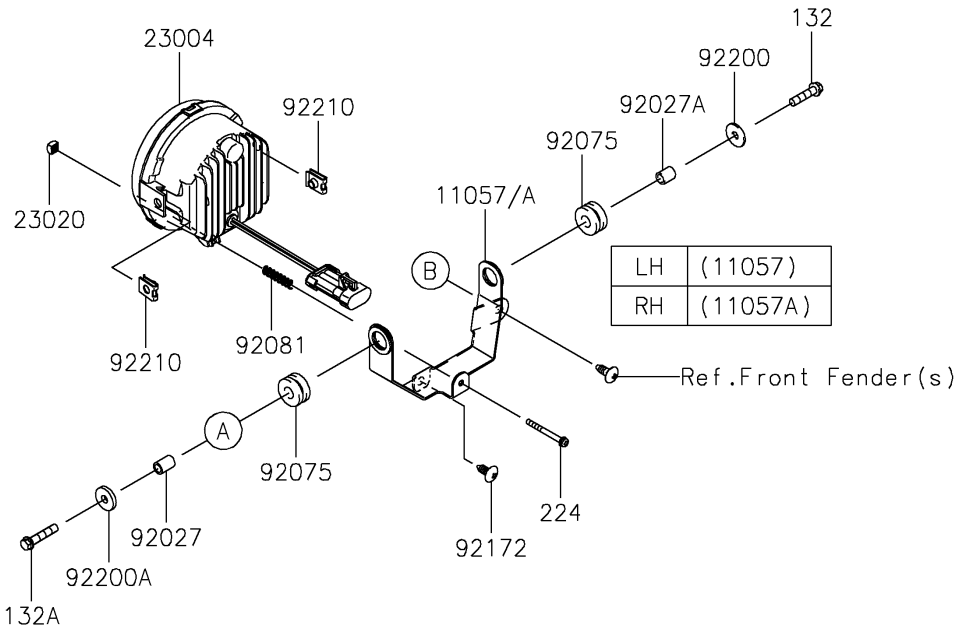

© 2026 Kawasaki Motors Corp., U.S.A.

2022 MULE PRO-FXR™

PARTS LIST

Headlight(s)

ITEM NAME	PART NUMBER	QUANTITY
BRACKET (Ref # 11056)	11056-2933	2
BRACKET,LED HL,LH (Ref # 11057)	11057-0755	1
BRACKET,LED HL,RH (Ref # 11057A)	11057-0783	1
LAMP-HEAD (Ref # 23004)	23004-0372	2
LENS-COMP,HEAD LAMP (Ref # 23007)	23007-0096	2
LENS-COMP,HEAD LAMP (Ref # 23007A)	23007-0220	2
NUT,4MM,FOCUS ADJUST (Ref # 23020)	23020-018	4
COLLAR,6.8X10X14.5 (Ref # 92027)	92027-156	2
COLLAR,6.8X10X12 (Ref # 92027A)	92027-162	6
BULB,12V 35/35W (Ref # 92069)	92069-0019	2
BULB,12V 35/35W (Ref # 92069A)	92069-0102	2
DAMPER,10X24X12 (Ref # 92075)	92075-1690	8
SPRING,FOCUS ADJUST (Ref # 92081)	92081-1896	4
SCREW,6X16 (Ref # 92172)	92172-0284	4
WASHER,6.5X20X1.6 (Ref # 92200)	92200-0283	6
WASHER,6.5X20X3.2 (Ref # 92200A)	92200-0359	2
NUT (Ref # 92210)	92210-1125	8
BOLT-FLANGED-SMALL,6X25 (Ref # 132)	132BA0625	6
BOLT-FLANGED-SMALL,6X30 (Ref # 132A)	132BA0630	2
SCREW-PAN-WP-CROS (Ref # 224)	224AA0440	4

© 2026 Kawasaki Motors Corp., U.S.A.