2021 MULE PRO-FX™ EPS

PARTS DIAGRAM

Fuel Evaporative System(CA)

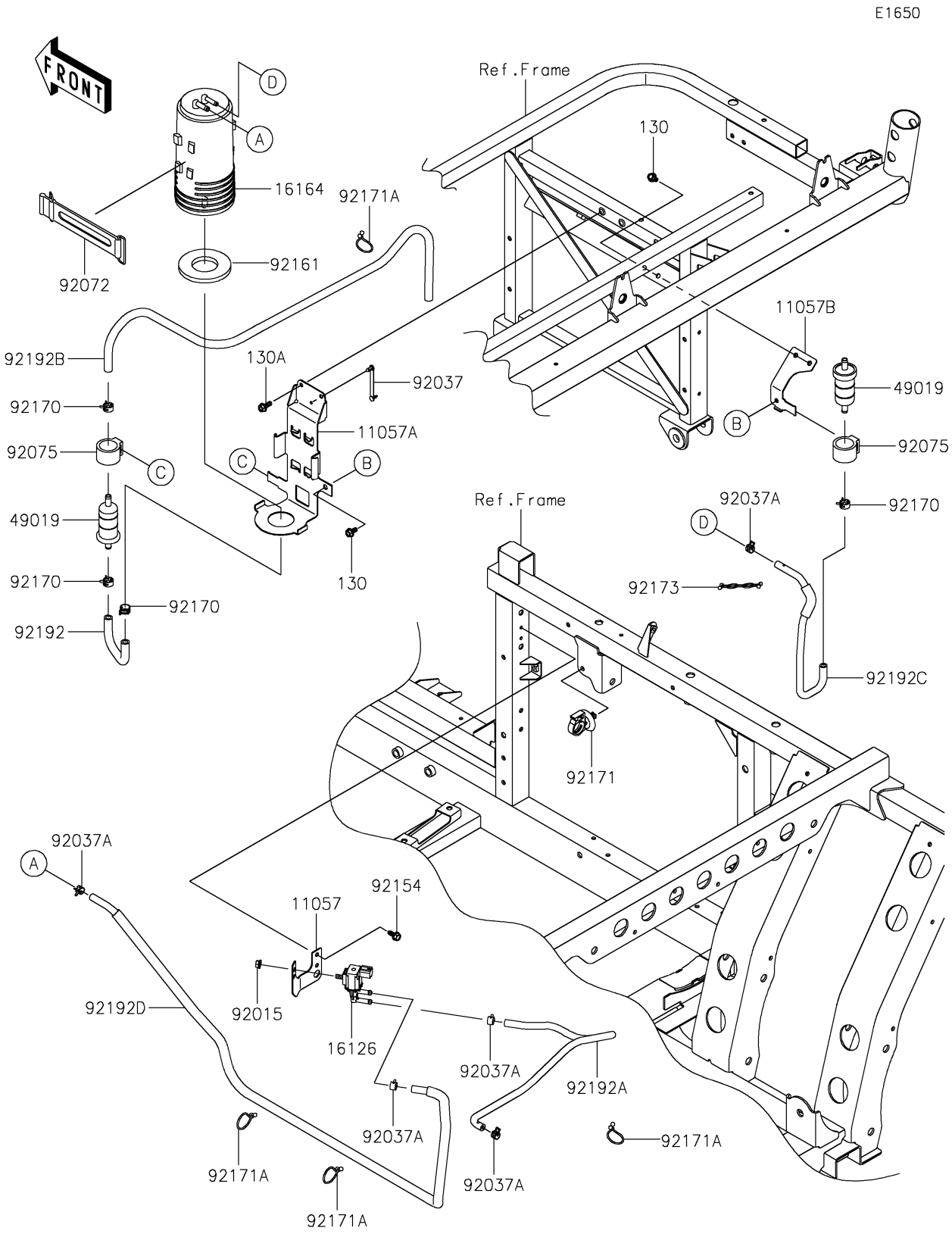

© 2026 Kawasaki Motors Corp., U.S.A.

2021 MULE PRO-FX™ EPS

PARTS LIST

Fuel Evaporative System(CA)

ITEM NAME	PART NUMBER	QUANTITY

© 2026 Kawasaki Motors Corp., U.S.A.