2022 MULE PRO-FX™

PARTS DIAGRAM

Taillight(s)

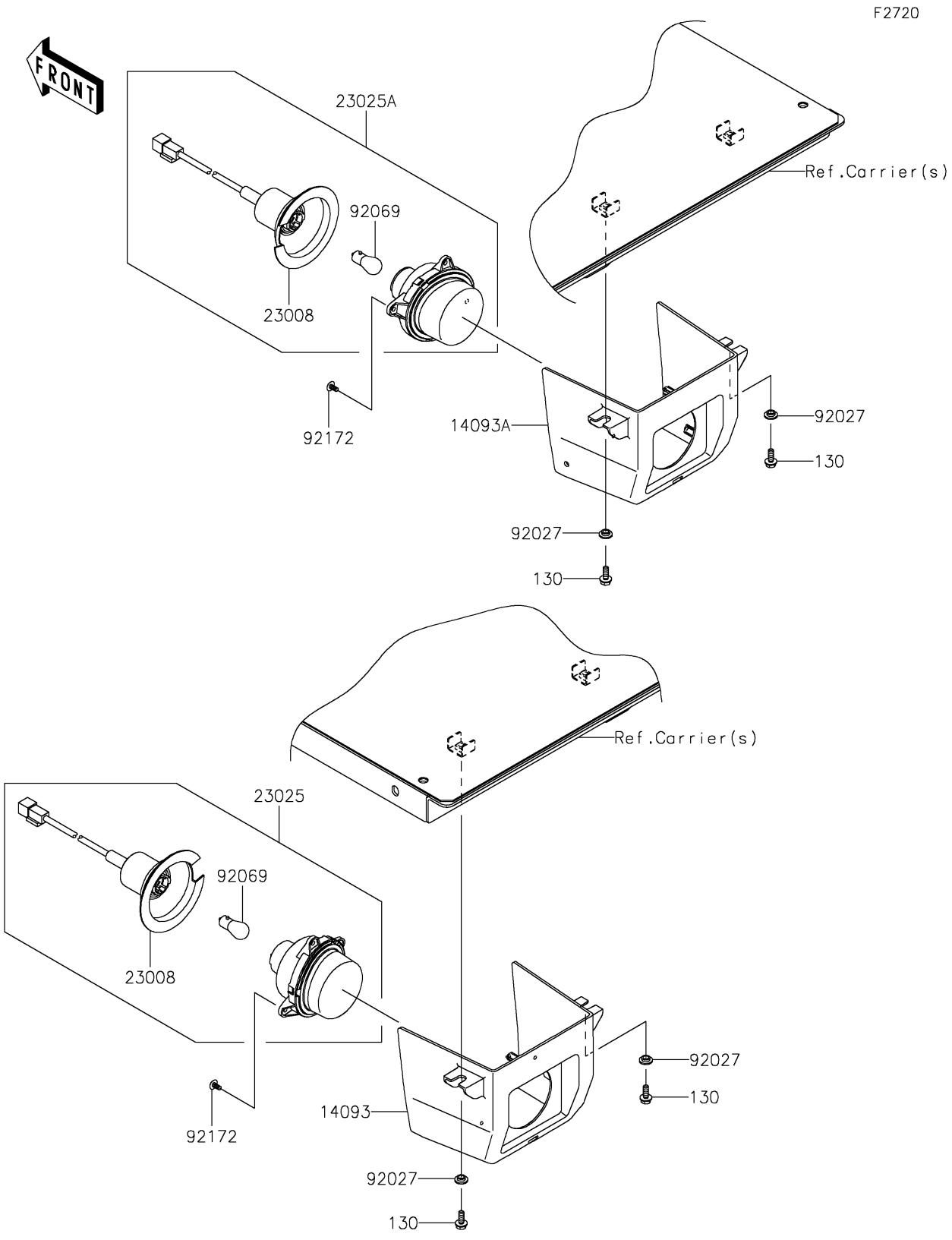

© 2026 Kawasaki Motors Corp., U.S.A.

2022 MULE PRO-FX™

PARTS LIST

Taillight(s)

ITEM NAME	PART NUMBER	QUANTITY
COVER,TAIL LAMP,LH (Ref # 14093)	14093-0580	1
COVER,TAIL LAMP,RH (Ref # 14093A)	14093-0581	1
SOCKET-ASSY (Ref # 23008)	23008-0162	2
LAMP-TAIL,LH (Ref # 23025)	23025-0334	1
LAMP-TAIL,RH (Ref # 23025A)	23025-0341	1
COLLAR,L=4.6 (Ref # 92027)	92027-1168	4
BULB,12V 21/5W (Ref # 92069)	92069-0072	2
SCREW,TAPPING,5X10 (Ref # 92172)	92172-0262	6
BOLT-FLANGED,6X16 (Ref # 130)	130CA0616	4

© 2026 Kawasaki Motors Corp., U.S.A.