2022 MULE PRO-FX™

PARTS DIAGRAM

Headlight(s)

F2710

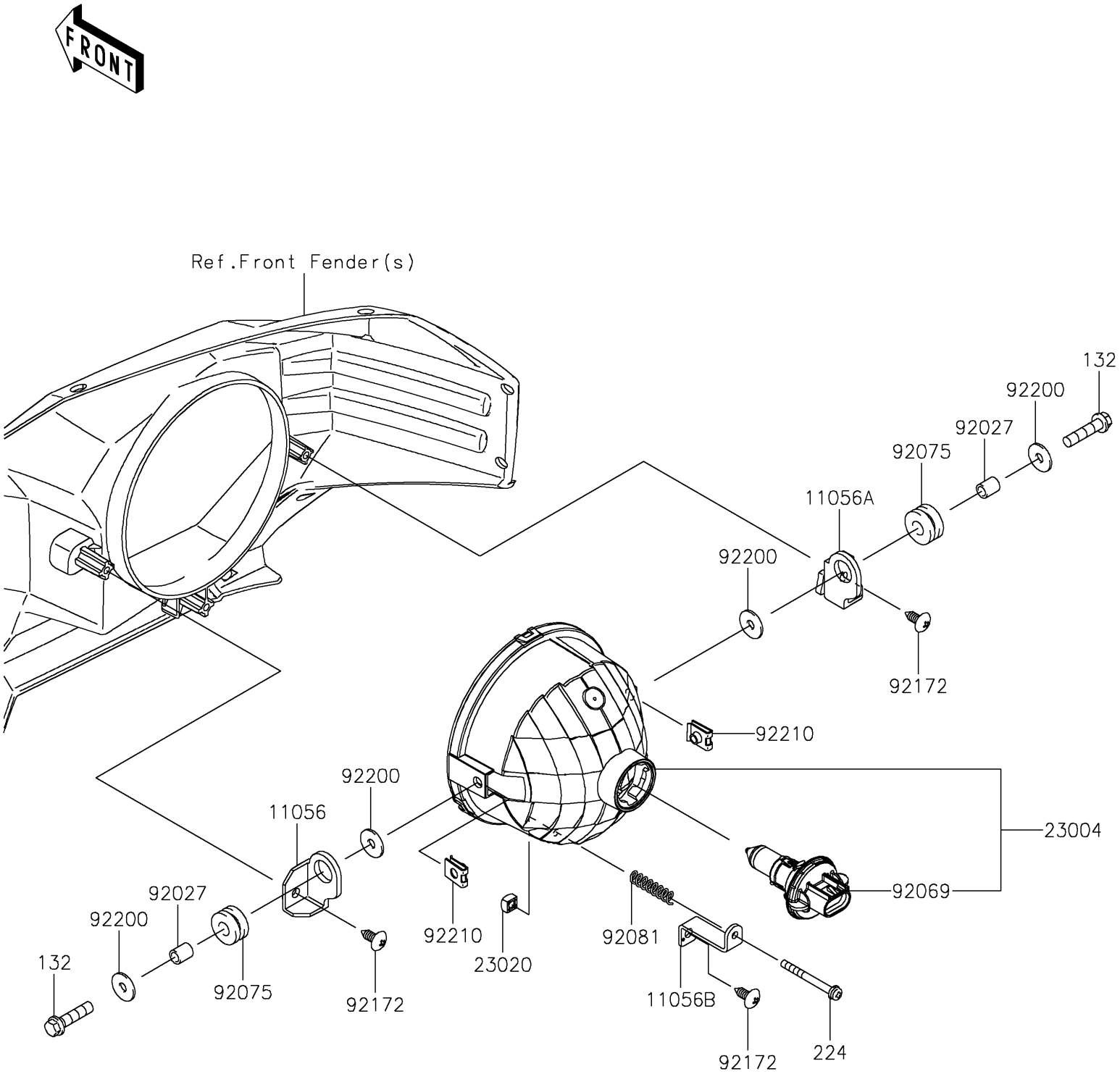

© 2026 Kawasaki Motors Corp., U.S.A.

2022 MULE PRO-FX™

PARTS LIST

Headlight(s)

ITEM NAME	PART NUMBER	QUANTITY
BRACKET,LH (Ref # 11056)	11056-2931	2
BRACKET,RH (Ref # 11056A)	11056-2932	2
BRACKET (Ref # 11056B)	11056-2933	2
LAMP-HEAD (Ref # 23004)	23004-0387	2
NUT,4MM,FOCUS ADJUST (Ref # 23020)	23020-018	2
COLLAR,6.8X10X12 (Ref # 92027)	92027-162	4
BULB,12V 60/55W,H13 (Ref # 92069)	92069-0105	2
DAMPER,10X24X12 (Ref # 92075)	92075-1690	4
SPRING,FOCUS ADJUST (Ref # 92081)	92081-1896	2
SCREW,6X16 (Ref # 92172)	92172-0284	6
WASHER,6.5X20X1.6 (Ref # 92200)	92200-0283	8
NUT (Ref # 92210)	92210-1125	4
BOLT-FLANGED-SMALL,6X25 (Ref # 132)	132BA0625	4
SCREW-PAN-WP-CROS (Ref # 224)	224AA0440	2

© 2026 Kawasaki Motors Corp., U.S.A.