2023 MULE PRO-FX™

PARTS DIAGRAM

Ignition System

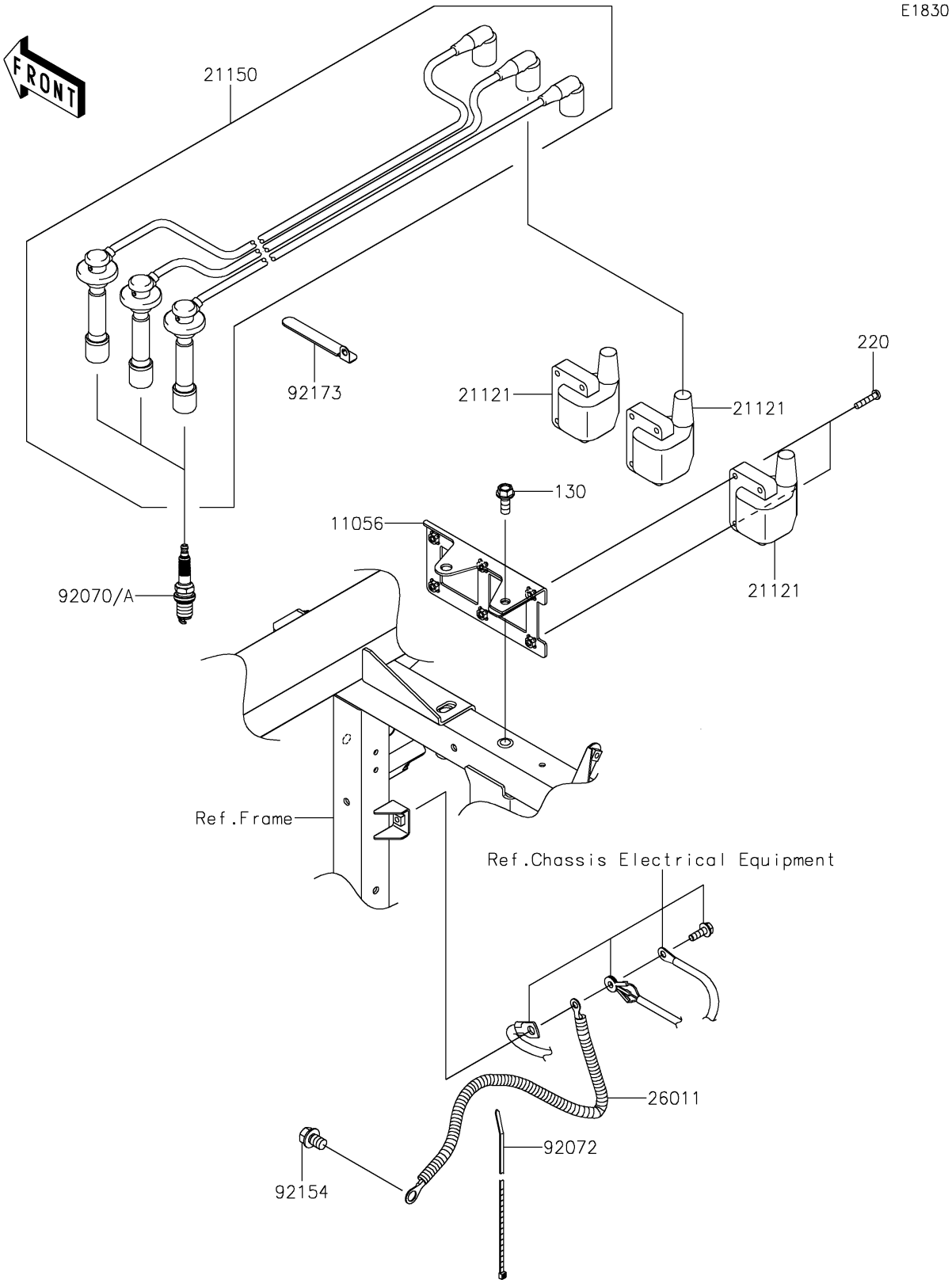

© 2026 Kawasaki Motors Corp., U.S.A.

2023 MULE PRO-FX™

PARTS LIST

Ignition System

ITEM NAME	PART NUMBER	QUANTITY
BRACKET (Ref # 11056)	11056-7248	1
COIL-IGNITION (Ref # 21121)	21121-0724	3
CORD-ASSY,HIGH TENSION (Ref # 21150)	21150-0013	1
WIRE-LEAD (Ref # 26011)	26011-0846	1
PLUG-SPARK,7026(TORCH) (Ref # 92070)	92070-0048	3
PLUG-SPARK,IFR6B11(NGK) (Ref # 92070A)		3
BAND,L=292.1 (Ref # 92072)	92072-3509	1
BOLT,FLANGED,10X14 (Ref # 92154)	92154-1383	1
CLAMP (Ref # 92173)	92173-1056	1
BOLT-FLANGED,8X20 (Ref # 130)	130BA0820	1
SCREW-PAN-CROS,5X25 (Ref # 220)	220AA0525	6

© 2026 Kawasaki Motors Corp., U.S.A.