2022 Concours®14 ABS

PARTS DIAGRAM

Front Wheel

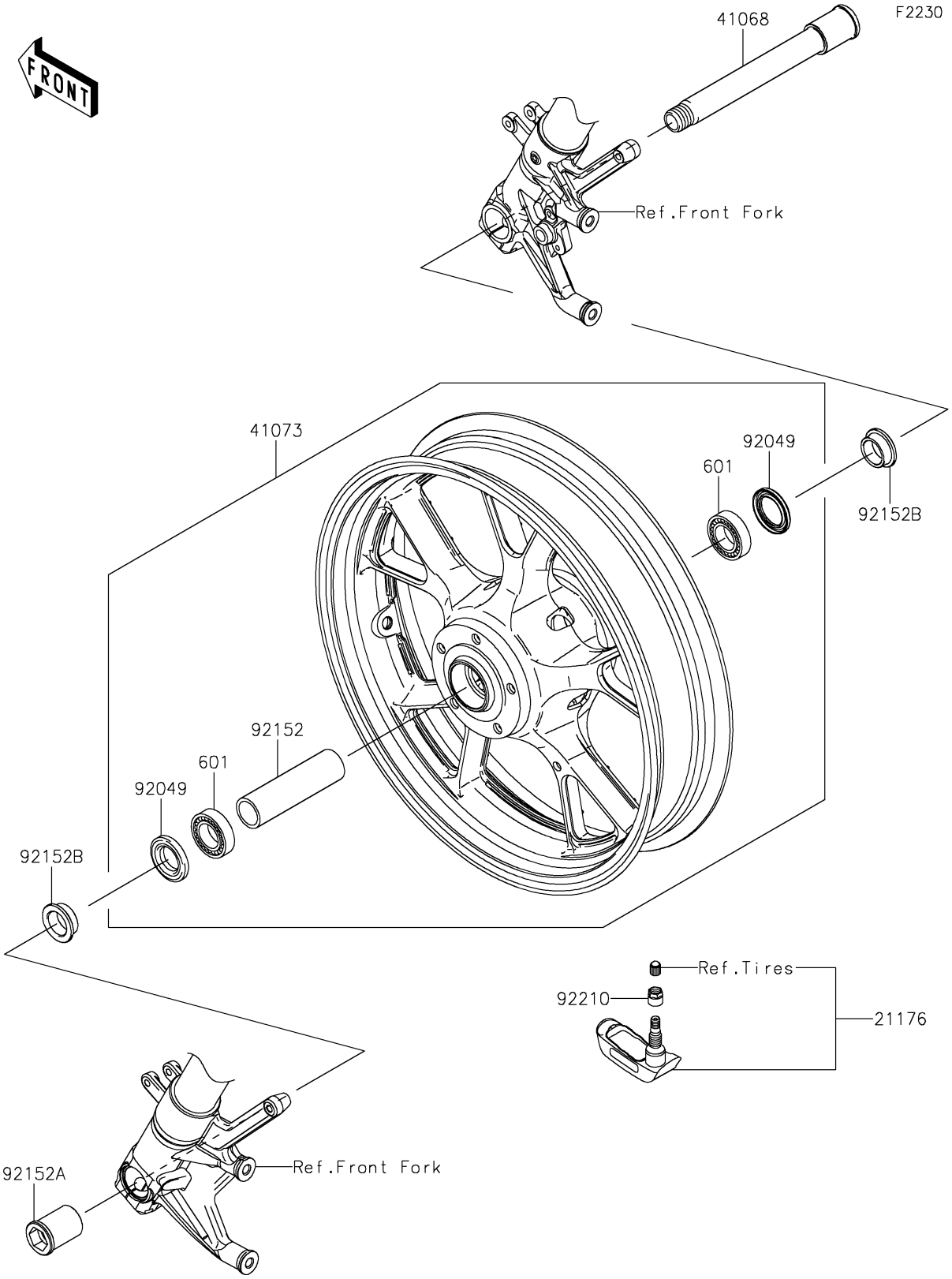

© 2026 Kawasaki Motors Corp., U.S.A.

2022 Concours®14 ABS

PARTS LIST

Front Wheel

ITEM NAME	PART NUMBER	QUANTITY
SENSOR,TPMS 315MHZ (Ref # 21176)	21176-1179	1
AXLE,FR,24X195 (Ref # 41068)	41068-0604	1
WHEEL-ASSY,FR,G.BLACK (Ref # 41073)	41073-0759-18F	1
SEAL-OIL,BJN-C2 32X47X5 (Ref # 92049)	92049-0050	2
COLLAR,FR HUB,L=115 (Ref # 92152)	92152-0242	1
COLLAR,NUT,24MM (Ref # 92152A)	92152-1464	1
COLLAR,25X32X13 (Ref # 92152B)	92152-2719	2
WASHER (Ref # 92200)	92200-2531	1
BEARING-BALL,#6005UU (Ref # 601)	601B6005UU	2

© 2026 Kawasaki Motors Corp., U.S.A.