1999 Vulcan 1500 Nomad

PARTS DIAGRAM

Ignition Switch/Locks/Reflectors

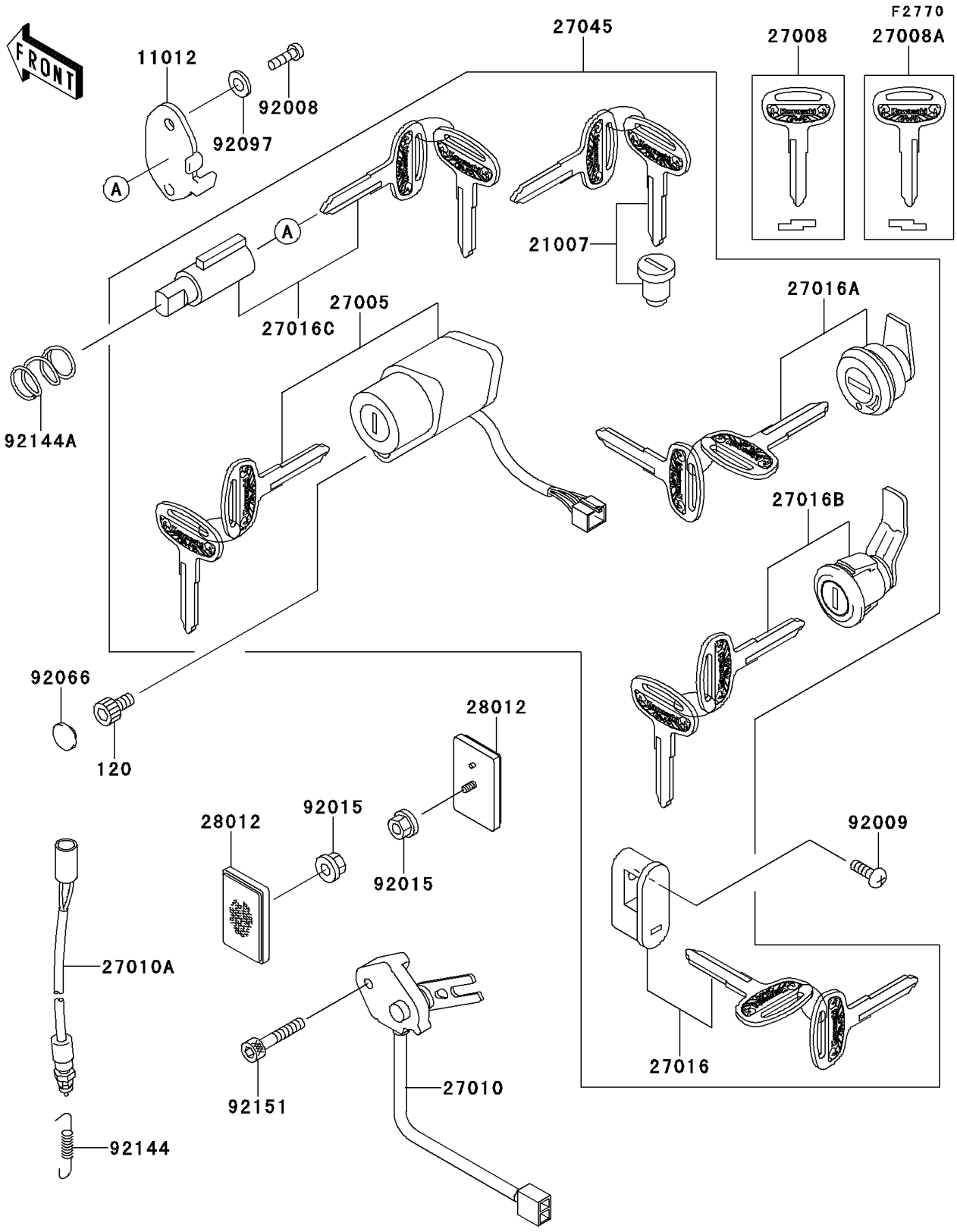

© 2026 Kawasaki Motors Corp., U.S.A.

1999 Vulcan 1500 Nomad

PARTS LIST

Ignition Switch/Locks/Reflectors

ITEM NAME	PART NUMBER	QUANTITY
BOLT-SOCKET (Ref # 120)	120P0512	1
CAP,STEERING LOCK (Ref # 11012)	11012-1586	1
ROTOR,LOCK,TANK CAP (Ref # 21007)	21007-5041	1
SWITCH-ASSY-IGNITION (Ref # 27005)	27005-1215	1
KEY-LOCK,BLANK,#A (Ref # 27008)	27008-1179	1
KEY-LOCK,BLANK,#B (Ref # 27008A)	27008-1180	1
SWITCH,SIDE STAND (Ref # 27010)	27010-1359	1
SWITCH,REAR BRAKE (Ref # 27010A)	27010-1412	1
LOCK-ASSY,HELMET (Ref # 27016)	27016-5243	2
LOCK-ASSY,LID (Ref # 27016A)	27016-5244	1
LOCK-ASSY,SIDE BAG (Ref # 27016B)	27016-5245	2
LOCK-ASSY,STEERING (Ref # 27016C)	27016-5246	1
SWITCH-ASSY (Ref # 27045)	27045-5064	1
REFLECTOR-REFLEX,FR (Ref # 28012)	28012-1009	2
SCREW,3.51MM (Ref # 92008)	92008-007	1
SCREW,5X12 (Ref # 92009)	92009-1296	2
NUT,FLANGED,5MM (Ref # 92015)	92015-1656	2
PLUG (Ref # 92066)	92066-1435	1
WASHER,WAVE (Ref # 92097)	92097-003	1
SPRING,REAR BRAKE SWITCH (Ref # 92144)	92144-1141	1
SPRING,STEERING LOCK (Ref # 92144A)	92144-1222	1
BOLT,SOCKET,6X35 (Ref # 92151)	92151-1390	1

© 2026 Kawasaki Motors Corp., U.S.A.