# 1999 Vulcan 1500 Nomad

## PARTS DIAGRAM

### Clutch Master Cylinder

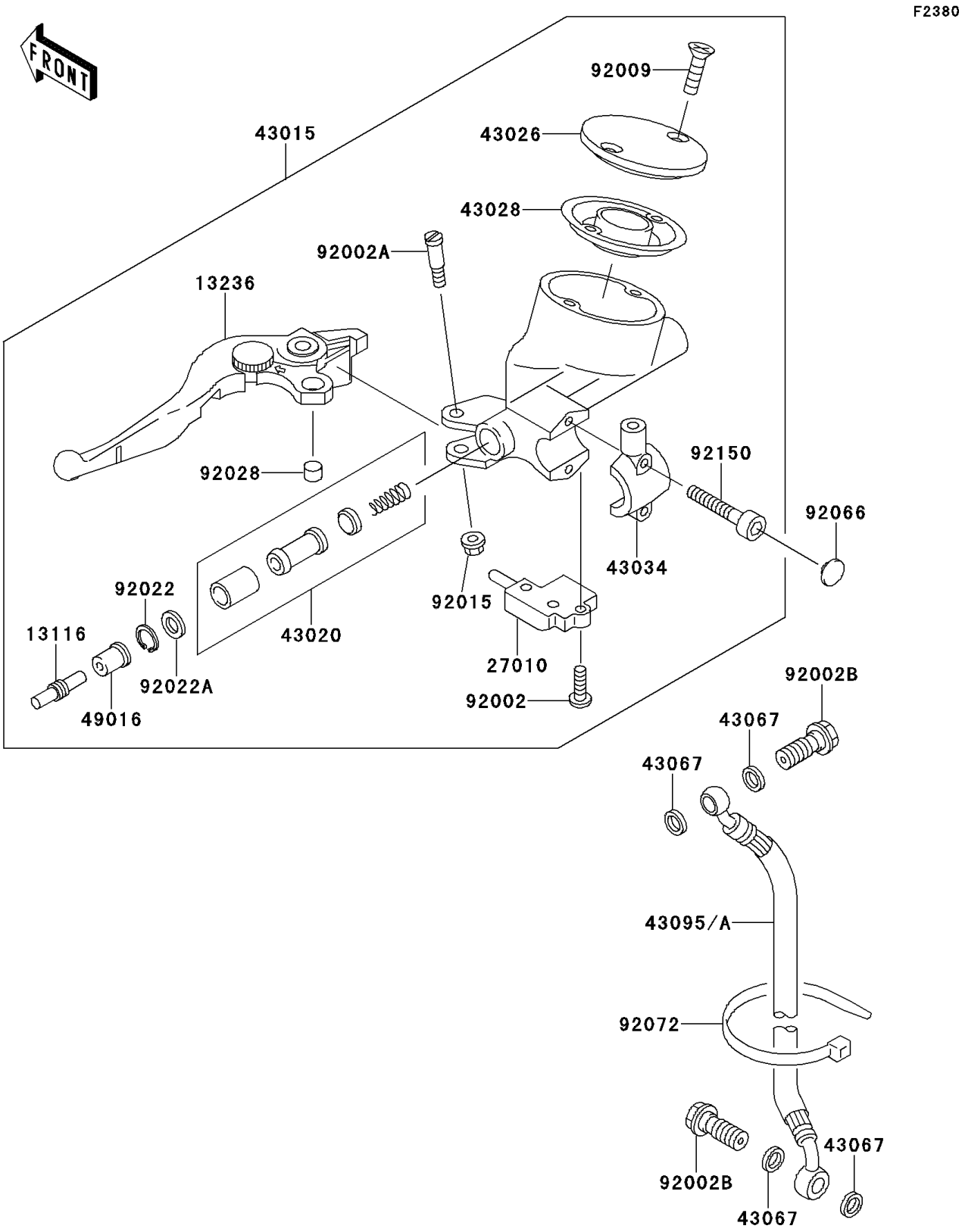


© 2026 Kawasaki Motors Corp., U.S.A.

# 1999 Vulcan 1500 Nomad

## PARTS LIST

### Clutch Master Cylinder

| ITEM NAME | PART NUMBER | QUANTITY |
|---|---|---|
| ROD-PUSH,MASTER CYLINDER (Ref # 13116) | 13116-1110 | 1 |
| LEVER-COMP,CLUTCH (Ref # 13236) | 13236-1316 | 1 |
| SWITCH,CLUTCH (Ref # 27010) | 27010-1406 | 1 |
| CYLINDER-ASSY-MASTER,CLUTCH (Ref # 43015) | 43015-1621 | 1 |
| PISTON-COMP-BRAKE,CLUTCH (Ref # 43020) | 43020-1055 | 1 |
| CAP-BRAKE (Ref # 43026) | 43026-1083 | 1 |
| DIAPHRAGM,MASTER CYLINDER (Ref # 43028) | 43028-1071 | 1 |
| HOLDER-BRAKE (Ref # 43034) | 43034-1147 | 1 |
| WASHER,10.5X15X1.5 (Ref # 43067) | 43067-001 | 4 |
| HOSE-BRAKE,CLUTCH (Ref # 43095) | 43095-1102 | 1 |
| COVER-SEAL,MASTER CYLINDER (Ref # 49016) | 49016-1044 | 1 |
| SCREW,4X16 (Ref # 92002) | 92002-1325 | 1 |
| BOLT,LEVER SET (Ref # 92002A) | 92002-1561 | 1 |
| BOLT,OIL,L=23 (Ref # 92002B) | 92002-1888 | 2 |
| SCREW,5MM (Ref # 92009) | 92009-1440 | 2 |
| NUT,FLANGED,6MM (Ref # 92015) | 92015-1528 | 1 |
| WASHER,PISTON (Ref # 92022) | 92022-1605 | 1 |
| WASHER,PISTON (Ref # 92022A) | 92022-1606 | 1 |
| BUSHING,MASTER CYLINDER (Ref # 92028) | 92028-1310 | 1 |
| PLUG (Ref # 92066) | 92066-1301 | 2 |
| BAND,L=365 (Ref # 92072) | 92072-1197 | 2 |
| BOLT,SOCKET,6MM (Ref # 92150) | 92150-1025 | 2 |

© 2026 Kawasaki Motors Corp., U.S.A.